PRODUCTOS Y SOLUCIONES
EN REDES DE FLUIDOS

PRODUCTS AND SOLUTIONS
IN FLOW SYSTEMS

ACCESORIOS SECTOR AGUA

WATERWORKS ACCESSORIES

Fondon global

Contents

03 **Universal Coupling and Flange Adaptor**
03 Figure T1800 Universal Coupling
05 Figure T1810 Stepped Coupling
06 Figure T1820 Universal Flange Adaptor
07 **Dedicated Coupling and Flange Adaptor**
07 Figure T1830 Dedicated Coupling for Ductile Iron Pipe
08 Figure FC40 Dedicated Coupling for Steel Pipe
09 Figure T1840 Dedicated Flange Adaptor for Ductile Iron Pipe
10 Figure T1850 Dedicated Flange Adaptor for Steel Pipe
11 Figure T1860 Major Stop Flange for PVC/PE Pipe
12 Figure T1870 Saddle Clamp for PVC Pipe
13 Figure T1880 Gibault Joint
14 **Dismantling Joint**
14 Figure AC1000 PN10-PN40 Dismantling Joint
17 Figure AC1100 PN10-PN16 Dismantling Joint
18 Figure AC1200 PN10-PN25 Welded Dismantling Joint
20 **Ductile Iron Fittings for PVC and Flanged Pipes**
20 Fittings for PVC Pipe
26 Flanged Pipe and Fittings
35 **Rubber Expansion Joint**
35 Spherical Rubber Expansion Joint
38 Spool Arch Rubber Expansion Joint
39 Heavy Duty Rubber Expansion Joint
40 Reducer Type Rubber Expansion Joint
41 Control Units
42 Rubber Duckbill Check Valve
46 Metallic Expansion Joint

Universal Coupling Fig.T1800

Standard Sleeve

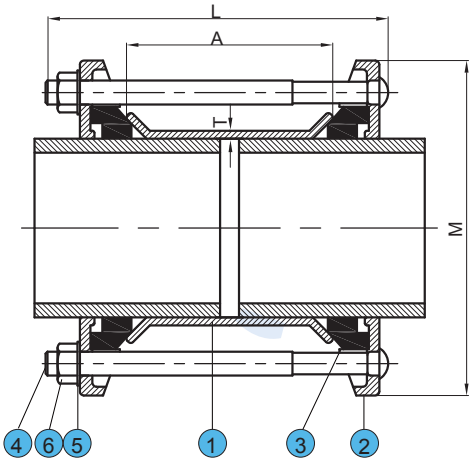

Features

- Ductile Iron GGG50 material with FBE coated.
- PN10,PN16 working pressure.
- Equipped with galvanized steel bolts, nuts.
- EPDM or NBR rubber seals .
- High Tolerance Mechanical Pipe Fittings
- Angular deflection +/- 6°.

Material Specification:

Item No.	Parts Name	Material	Specification
1	Center Sleeve	Ductile Iron	GJS500-7
2	End Ring	Ductile Iron	GJS500-7
3	Rubber Seal	Rubber	EPDM
4	Bolt	Zinc Plated Steel	ISO898-1:1999
5	Washer	Zinc Plated Steel	
6	Nut	Zinc Plated Steel	ISO898-2:1992

Dimensions(mm)

Nominal Size	Size Range		Diameter	Overall Length	Sleeve	Setting Gap	Max Gap	Bolts Nr.& Size	Weight Kg
(mm)	Min	Max	M	L	(A)x(T)				
DN40	48.0	60.0	149.5	190.0	100.0x4.5	20.0	40.0	2-M12x180	3.1
DN50	59.0	72.0	154.5	190.0	95.0x4.5	20.0	40.0	4-M12xl80	3.0
DN65	63.0	84.0	173.5	190.0	95.0x4.5	20.0	40.0	4-M12xl80	3.6
DN80	88.0	103.0	195.5	190.0	95.0x4.5	20.0	40.0	4-M12xl80	4.1
DN100	108.0	128.0	224.5	190.0	95.0x4.5	20.0	40.0	4-M12xl80	4.8
DN125	132.0	159.0	254.5	190.0	95.0x5.0	20.0	40.0	4-M12xl80	6.0
DN150	158.0	182.0	280 5	190.0	95.0x5.0	20.0	40.0	4 Ml2x180	6.9
DN175	192.0	210.0	306.5	230.0	130.0x5.0	25.0	50.0	4-M12x220	9.4
DN200	218.0	235.0	342.5	230.0	130.0x5.0	25.0	50.0	4-M12x220	10.9
DN225	242.0	269.0	3675.0	230.0	130.0x5.0	25.0	50.0	6-M12x220	12.4
DN250	272.0	289.0	399.5	230.0	130.0x5.0	25.0	50.0	6-M12x220	14.6
DN300	315.0	332.0	462.5	230.0	130.0x5.0	25.0	50.0	8-M12x220	19.4

Universal Coupling Fig.T1800

Long Sleeve

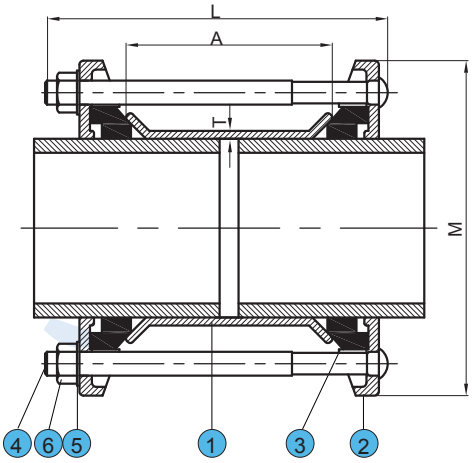

Material Specification:

Item No.	Parts Name	Material	Specification
1	Center Sleeve	Ductile Iron	GJS500-7
2	End Ring	Ductile Iron	GJS500-7
3	Rubber Seal	Rubber	EPDM
4	Bolt	Zinc Plated Steel	ISO898-1:1999
5	Washer	Zinc Plated Steel	
6	Nut	Zinc Plated Steel	ISO898-2:1992

Features

- Ductile Iron GGG50 material with FBE coated.
- PN10,PN16 working pressure.
- Equipped with galvanized steel bolts, nuts.
- EPDM or NBR rubber seals .
- High Tolerance Mechanical Pipe Fittings
- Angular deflection +/- 6°.

Dimensions(mm)

Nominal Size	Size Range		Diameter	Overall Length	Sleeve	Setting Gap	Max Gap	Bolts Nr.& Size	Weight Kg
(mm)	Min	Max	M	L	(A)x(T)				
DN50	59.0	72.0	154.5	285.0	200.0x4.5	20.0	140.0	4-M12x275	4.6
DN65	63.0	84.0	173.5	285.0	190.0x4.5	20.0	130.0	4-M12x275	5.2
DN80	88.0	103.0	195.5	285.0	200.0x4.5	20.0	140.0	4-M12x275	6.3
DN100	108.0	128.0	224.5	285.0	190.0x45	20.0	130.0	4-M12x275	7.2
DN125	132.0	159.0	254.5	285.0	190.0x5.0	20.0	130.0	4-M12x275	9.0
DN150	158.0	182.0	280.5	285.0	190.0x5.0	20.0	130.0	4-M12x275	10.3
DN175	192.0	210.0	306 5	285.0	190.0x5.0	25.0	110.0	4-M12x275	12.1
DN200	218.0	235.0	342.5	285.0	190.0x5.0	25.0	110.0	4-M12x275	14.1
DN225	242.0	269.0	367.5	350.0	250.0x5.0	25.0	165.0	6-M12x340	18.6
DN250	272.0	289.0	399.5	350.0	250.0x5.0	25.0	165.0	6-M12x340	21.4
DN300	315.0	332.0	462.5	350.0	240.0x5.0	25.0	155.0	8-M12x340	27.0

Stepped Coupling Fig.T1810

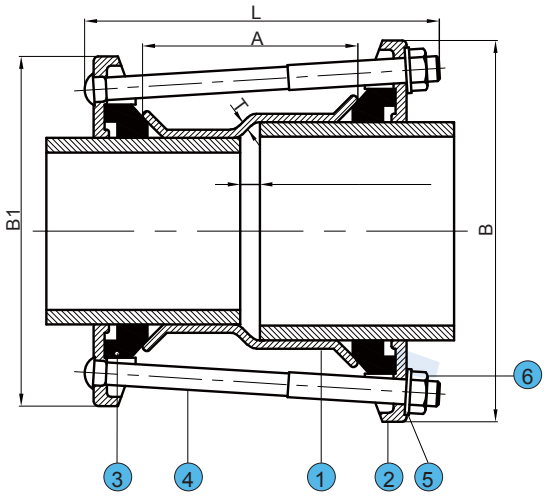

Features

- Ductile Iron GGG50 material with FBE coated.
- PN10,PN16 working pressure.
- Equipped with galvanized steel bolts, nuts.
- EPDM or NBR rubber seals .
- High Tolerance Mechanical Pipe Fittings
- Angular deflection +/- 6°.

Material Specification:

Item No.	Parts Name	Material	Specification
1	Center Sleeve	Ductile Iron	GJS500-7
2	End Ring	Ductile Iron	GJS500-7
3	Rubber Seal	Rubber	EPDM
4	Bolt	Zinc Plated Steel	ISO898-1:1999
5	Washer	Zinc Plated Steel	
6	Nut	Zinc Plated Steel	ISO898-2:1992

Dimensions(mm)

Size Range				Diameter		Overall Length	Sleeve	Setting Gap	Max Gap	Bolts Nr.& Size	Weight Kg
Small End		Large End									
Min	Max	Min	Max	B1	B	L	(A)x(T)				
59.0	72.0	63.0	84.0	154.5	173.5	210.0	110.0x4.5	20.0	40.0	4-M12x200	3.5
59.0	72.0	84.0	103.0	154.5	195.5	210.0	110.0x4.5	20.0	40.0	4-M12x200	3.9
63.0	84.0	84.0	103.0	173.5	195.5	210.0	110.0x4.5	20.0	40.0	4-M12x200	4.2
88.0	103.0	103.0	132.0	195.5	224.5	210.0	110.0x4.5	20.0	40.0	4-M12x200	4.9
108.0	128.0	132.0	158.0	224.5	254.5	220.0	120.0x4.5	20.0	40.0	4-M12x210	6.2
132.0	158.0	158.0	182.0	254.5	280.5	220.0	120.0x5.0	20.0	40.0	4-M12x210	7.2
158.0	182.0	192.0	210.0	280.5	306.5	230.0	130.0x5.0	25.0	50.0	4-M12x220	8.8
192.0	210.0	218.0	235.0	306.5	342.5	230.0	130.0x5 0	25.0	50.0	4-M12x220	10.4
218.0	235.0	242.0	266.0	342.5	367.5	230.0	130.0x5.0	25.0	50.0	6-M12x220	12.0
242.0	266.0	272.0	289.0	367.5	399.5	230.0	130.0x5.0	25.0	50.0	6-M12x220	13.8

Universal Flange Adaptor Fig.T1820

Material Specification:

Item No.	Parts Name	Material	Specification
1	Body	Ductile Iron	GJS500-7
2	End Ring	Ductile Iron	GJS500-7
3	Rubber Seal	Rubber	EPDM
4	Bolt	Zinc Plated Steel	ISO898-1:1999
5	Washer	Zinc Plated Steel	
6	Nut	Zinc Plated Steel	ISO898-2:1992

Features

- Ductile Iron GGG50 material with FBE coated.
- PN10,PN16 working pressure.
- Equipped with galvanized steel bolts, nuts.
- EPDM or NBR rubber seals .
- High Tolerance Mechanical Pipe Fittings
- Angular deflection +/- 6°.

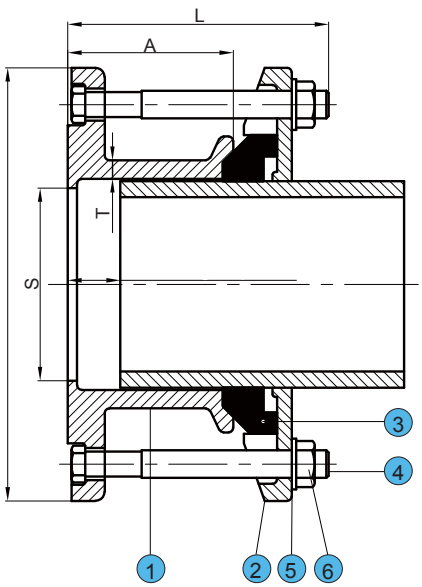

Dimensions(mm)

Size Range		Diameter	Bore	Overall Lengh	Sleeve	Setting	Max	Flange Driling	Bolts Nr.&	Weight
Min	Max	M	S	L	(A)x(T)	Gap	Gap		Size	Kg
59.0	74.0	163.4	59.0	124.0	75.0x4.5	20.0	40.0	50 PN10/16 2.5" BS10 Table A/D/E 2" ANSI125	4-M12x115	2.7
63.0	85.0	196.9	75.0	124.0	75.0x4.5	20.0	40.0	60 PN10/16 65 PN10/16, 80PN10/16 3" BS10 TableA/D/E 2.5" ANSI125 3" ANSI125 80 AS2129C/D 80 AS4087E	4-MI2x115	3.5
88.0	103.0	202.5	101.0	124.0	75.0x4.5	20.0	40.0	80 PN10/16, 3" ANSI125 3.5" BS10 Table A/D 3.5" BS10 Table E	4-M12x115	3.7
108.0	128.0	228.0	121.0	134.0	75.0x4.5	20.0	40.0	100 PN 10/16 4" BS10 Table A/D/E 4" AWWA C207D 100 AS2129C/D 100 AS4087E	4-M12x125	4.4
132.0	160.0	281.5	150.0	134.0	75.0x5.0	20.0	40.0	125 PN10/16,150 PN10/16 5" BS10 TableA/D/E 6" BS10 TableA/D/E 6'' AWWA C207D 125 AS2129C/D 150 AS2129C/D 125 AS4087 E 150 AS4087 E	4-M12x125	5.6
159.0	182.0	281.2	173.0	134.0	75.0x5.0	20.0	40.0	150 PN10/16 6" BS10 Table A/D 6" AWWA C207D 150 AS4087E,150 AS2129C/D	4-M12x125	6
192.0	210.0	336.5	202.0	133.0	75.0x5.0	25.0	40.0	200 PN10/16,8" BS10 Table A/D 8" AWWA C207D 200 AS2129C/D,200 AS4087 E	4-M12x125	8.3
218.0	235.0	337.8	225.0	134.0	75.0x5.0	25.0	40.0	200 PN10/16,8" BS10 TableA/D 8" AWWA C207D 200 AS2129C/D	4-M12x125	8.3
272.0	289.0	401.5	252.0	144.0	85.0x5.0	25.0	50.0	250 PN10/16, 250 AS4087 E	6-M12xl35	10.9
266.0	295.0	402.1	277.0	146.0	85.0x5.0	25.0	50.0	250 PN10/16, 250 AS4087 E	6-M12xl35	11.4
315.0	332.0	457.8	329.0	155.0	100.0x5.0	25.0	60.0	300 PN10/16 12" BS10 Table D 300 AS2129C/D	6-M12xl45	14.8

Dedicated Coupling Fig.T1830

For Ductile Iron Pipe

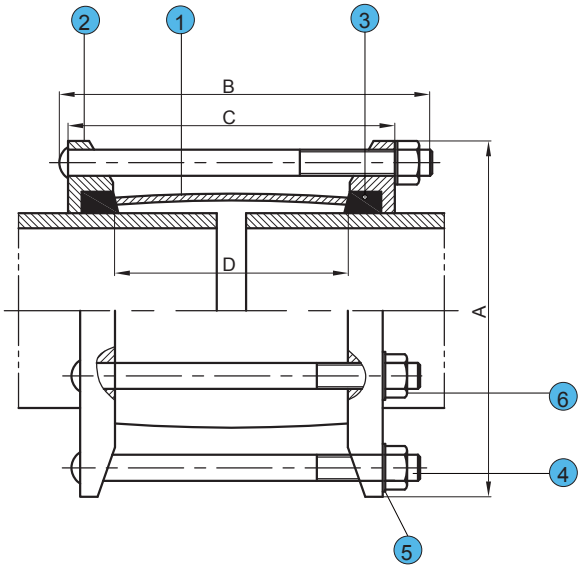

Material Specification:

Item No.	Parts Name	Material	Specification
1	Center Sleeve	Ductile Iron	GJS500-7
2	End Ring	Ductile Iron	GJS500-7
3	Rubber Seal	Rubber	EPDM
4	Bolt	Zinc Plated Steel	ISO898-1:1999
5	Washer	Zinc Plated Steel	
6	Nut	Zinc Plated Steel	ISO898-2:1992

Features

- Ductile Iron GGG50 material with FBE coated.
- PN10,PN16 working pressure.
- Equipped with galvanized steel bolts, nuts.
- EPDM or NBR rubber seals .
- Suitable for Ductile Iron Pipes.

Dimensions(mm)

DN	Pipe O.D	A	B	C	D	Bolts Nr.	Bolts Size (M x L)
40	56	120	166	125	102	2	M12x158
50	66	126	166	125	102	2	M12x158
60	77	135	166	125	102	2	M12x158
65	82	156	166	125	102	2	M12x158
80	98	184	166	130	102	4	M12x158
100	118	205	166	130	102	4	M12x158
125	144	232	166	130	102	4	M12x158
150	170	264	173	133	102	4	M12x165
200	222	315	173	133	102	6	M12x165
250	274	374	173	136	102	6	M12x165
300	326	426	173	136	102	6	M12x165
350	378	494	254	200	152	8	M16x240
400	429	544	254	200	152	8	M16x240
450	480	595	254	200	152	10	M16x240

DN	Pipe O.D	A	B	C	D	Bolts Nr.	Bolts Size (M x L)
500	532	650	254	210	152	10	M16x240
600	635	753	254	210	152	12	M16x240
700	738	858	254	210	152	12	M16x240
800	842	962	254	210	152	12	M16x240
900	945	1070	280	238	178	14	M16x265
1000	1048	1173	280	238	178	14	M16x265
1100	1152	1282	280	240	178	16	M16x265
1200	1255	1385	280	240	178	18	M16x265
1400	1462	1592	295	250	178	20	M20x280
1600	1668	1798	295	250	178	24	M20x280
1800	1875	2015	375	320	254	32	M20x360
2000	2082	2222	375	320	254	36	M20x360
2200	2288	2415	375	320	254	38	M20x360

Dedicated Coupling Fig.T1833

For Steel Pipe

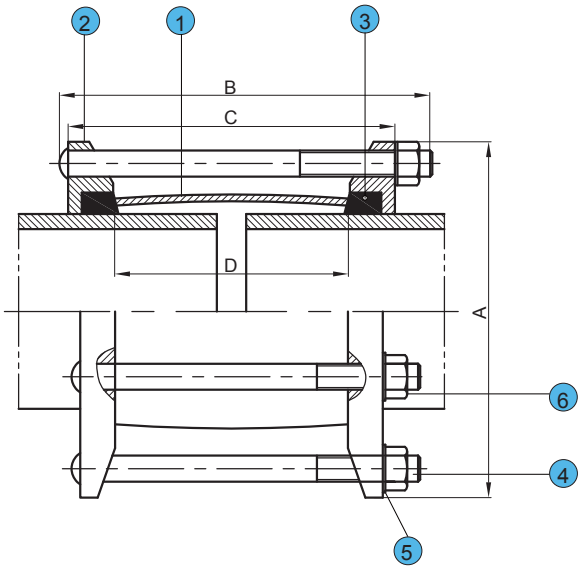

Features

- Ductile Iron GGG50 material with FBE coated.
- PN10,PN16 working pressure.
- Equipped with galvanized steel bolts, nuts.
- EPDM or NBR rubber seals .
- Suitable for Steel Pipes .

Material Specification:

Item No.	Parts Name	Material	Specification
1	Center Sleeve	Ductile Iron	GJS500-7
2	End Ring	Ductile Iron	GJS500-7
3	Rubber Seal	Rubber	EPDM
4	Bolt	Zinc Plated Steel	ISO898-1:1999
5	Washer	Zinc Plated Steel	
6	Nut	Zinc Plated Steel	ISO898-2:1992

Dimensions(mm)

DN	Pipe O.D	A	B	C	D	Bolts Nr.	Bolts Size (M x L)
15	21.3	98	150	112	83	2	M12xl40
20	26.9	102	150	112	83	2	M12xl40
25	33.7	115	150	112	83	2	M12xl40
32	42.4	120	150	112	83	2	M12xl40
40	48.3	125	150	112	83	2	M12xl40
50	60.3	138	150	112	83	2	M12xl40
65	76.1	160	160	118	102	2	M12xl52
80	88.9	172	160	125	102	3	M12xl52
90	101.6	184	160	125	102	4	M12xl52
100	114.3	200	160	125	102	4	M12xl52
125	139.7	232	173	125	102	4	M12xl65
150	165.2	258	173	125	102	4	M12xl52
150	168.3	260	173	125	102	4	M12xl52
200	216.3	310	173	125	102	6	M12xl52
200	219.1	313	173	125	102	6	Ml 2x152
250	267.4	366	173	127	102	6	M12xl52
250	273.1	373	173	127	102	6	M12xl52
300	318.5	420	173	129	102	6	M12xl52

DN	Pipe O.D	A	B	C	D	Bolts Nr.	Bolts Size (M x L)
300	323.9	424	173	129	102	6	M12xl52
350	355.6	471	254	200	152	8	Ml 6x240
400	406.4	521	254	200	152	8	M16x240
450	457.2	572	254	200	152	8	Ml 6x240
500	508	628	254	210	152	10	M16x240
550	558.8	679	254	210	152	10	Ml 6x240
600	609.6	730	254	210	152	10	Ml 6x240
650	660.4	780	254	210	152	12	Ml 6x240
700	711.2	831	254	210	152	12	Ml 6x240
750	762	882	254	210	152	12	M16x240
800	812.8	932	254	210	152	12	M16x240
850	863.6	983	254	210	152	12	M16x240
900	914.4	1040	254	210	152	14	M16x240
1000	1016	1141	280	238	178	14	Ml 6x265
1050	1066.8	1197	280	240	178	16	M16x265
1100	1117.6	1248	280	240	178	16	M16x265
1200	1219.2	1350	280	240	178	16	Ml 6x265

Dedicated Flange Adaptor Fig.T1840

For Ductile Iron Pipe

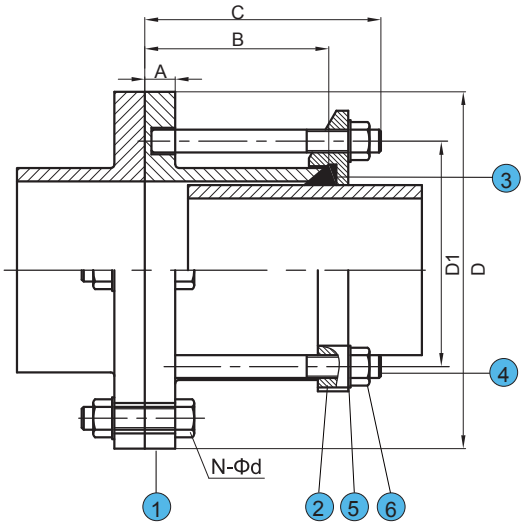

Material Specification:

Item No.	Parts Name	Material	Specification
1	Body	Ductile Iron	GJS500-7
2	End Ring	Ductile Iron	GJS500-7
3	Rubber Seal	Rubber	EPDM
4	Bolt	Zinc Plated Steel	ISO898-1:1999
5	Washer	Zinc Plated Steel	
6	Nut	Zinc Plated Steel	ISO898-2:1992

Features

- Ductile Iron GGG50 material with FBE coated.
- PN10,PN16 working pressure.
- Equipped with galvanized steel bolts, nuts.
- EPDM or NBR rubber seals .
- Suitable for Ductile Iron Pipes.

Dimensions(mm)

DN	Pipe O.D	A	B	C	PN10 Flange Drilling			PN16 Flange Drilling			Bolts Nr.	Bolts Size (M x L)
					D	D1	N-Φd	D	D1	N-Φd		
40	56	19	73	105	150	110	4-19	150	110	4-19	4	M12x100
50	66	19	73	105	165	125	4-19	165	125	4-19	4	M12x100
60	77	19	73	105	175	135	4-19	175	135	4-19	4	M12x100
65	82	19	73	105	185	145	4-19	185	145	4-19	4	M12x100
80	98	19	73	105	200	160	8-19	200	160	8-19	4	M12x100
100	118	19	73	105	220	180	8-19	220	180	8-19	4	M12x100
125	144	19	76	115	250	210	8-19	250	210	8-19	4	M12x100
150	170	19	76	115	285	240	8-23	285	240	8-23	4	M12x110
200	222	20	76	115	340	295	8-23	340	395	12-23	4	M12x110
250	274	22	90	130	400	350	12-23	400	355	12-28	6	M12x120
300	326	24.5	90	130	455	400	12-23	455	410	12-28	6	M12x120
350	378	24.5	110	156	505	460	16-23	520	470	16-28	8	M16x145
400	429	24.5	110	156	565	515	16-28	580	525	16-31	8	M16x145
450	480	24.5	110	156	615	565	20-28	640	585	20-31	10	M16x145
500	532	26.5	115	162	670	620	20-28	715	650	20-34	10	M16x150
600	635	30	115	165	780	725	20-31	840	770	20-37	10	M16x150
700	738	32.5	115	165	895	740	24-31	910	840	24-37	12	M16x150
800	842	35	115	165	1015	950	24-34	1025	950	24-40	12	M16x150
900	942	37.5	115	165	1115	1050	28-34	1125	1050	28-40	14	M16x150
1000	1048	40	115	165	1230	1160	28-37	1255	1170	28-43	14	M16x150
1200	1255	45	130	180	1455	1380	32-40	1485	1390	32-49	16	M16x170
1400	1462	46	130	180	1675	1590	36-43	1685	1590	36-49	18	M20x170
1600	1668	49	190	275	1915	1820	40-49	1930	1820	40-56	20	M20x240
1800	1875	52	190	275	2115	2020	44-49	2130	2020	44-56	22	M20x240
2000	2082	55	190	275	2325	2230	48-49	2345	2230	48-62	24	M20x240
2200	2288	59	210	315	2550	2440	52-56	2555	2440	52-62	26	M20x265

Dedicated Flange Adaptor Fig.T1850

For Steel Pipe

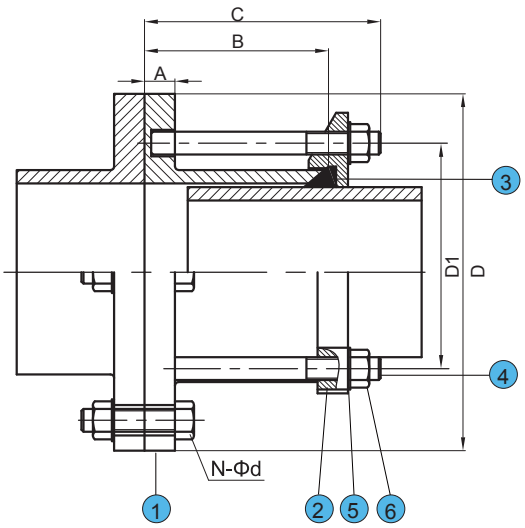

Features

- Ductile Iron GGG50 material with FBE coated.
- PN10,PN16 working pressure.
- Equipped with galvanized steel bolts, nuts.
- EPDM or NBR rubber seals.
- Suitable for Steel Pipes.

Material Specification:

Item No.	Parts Name	Material	Specification
1	Body	Ductile Iron	GJS500-7
2	End Ring	Ductile Iron	GJS500-7
3	Rubber Seal	Rubber	EPDM
4	Bolt	Zinc Plated Steel	ISO898-1:1999
5	Washer	Zinc Plated Steel	
6	Nut	Zinc Plated Steel	ISO898-2:1992

Dimensions(mm)

DN	PN	Pipe O.D	A	B	C	Flange Drilling			Bolts Nr.	Bolts Size (M x L)
						D	D1	N-Φd		
50	10.16	60.3	19	73	105	165	125	4-19	4	M12xl00
65	10.16	76.1	19	73	105	185	145	4-19	4	M12xl00
80	10.16	88.9	19	73	105	200	160	8-19	4	M12xl00
100	10.16	114.3	19	73	105	220	180	8-19	4	M12xl00
125	10.16	139.7	19	76	115	250	210	8-19	4	M12xll0
150	10.16	168.3	19	76	115	285	240	8-23	4	M12xll0
200	10	219.1	20	76	115	340	295	8-23	4	M12xll0
200	16	219.1	20	76	115	340	295	12-23	6	M12xll0
250	10	273.1	22	90	130	400	350	12-23	6	M12xl20
250	16	273.1	24	90	130	400	355	12-28	6	M12xl20
300	10	323.9	24	90	130	455	400	12-23	6	M12xl20
300	16	323.9	24	90	130	455	410	12-28	6	M12xl20
350	10	355.6	24	110	156	505	460	16-23	8	M16xl50
350	16	355.6	26	110	156	520	470	16-28	8	M16xl50
400	10	406.4	24	110	156	565	515	16-28	8	M16xl50
400	16	406.4	28	110	156	580	525	16-31	8	M16xl50
450	10	457.2	25	110	156	615	565	20-28	10	M16xl50
450	16	457.2	30	110	156	640	585	20-31	10	M16xl50
500	10	508	26	115	162	670	620	20-28	10	M16xl50
500	16	508	31	115	162	718	650	20-34	10	M16xl50
600	10	609.6	30	115	165	780	725	20-31	10	M16xl50
600	16	609.6	36	115	165	840	770	20-37	10	M16xl50
700	10	711.2	32	115	165	895	840	24-31	12	M16xl50
700	16	711.2	39	115	165	910	840	24-37	12	M16xl50
800	10	812.8	35	115	165	1015	950	24-34	12	M16xl50
800	16	812.8	43	115	165	1025	950	24-40	12	M16xl50
900	10	914.4	37	115	165	1115	1050	28-34	14	M16xl50
900	16	914.4	46	115	165	1125	1050	28-40	14	M16xl50
1000	10	1016	40	115	165	1230	1160	28-37	14	M16xl50
1000	16	1016	50	115	165	1255	1170	28-43	14	M16xl50
1200	10	1219.2	45	130	180	1455	1380	32-40	16	M16xl70
1200	16	1219.2	57	130	180	1485	1390	32-49	16	M16xl70

Major Stop Flange for PVC/PE Pipe Fig.T1860

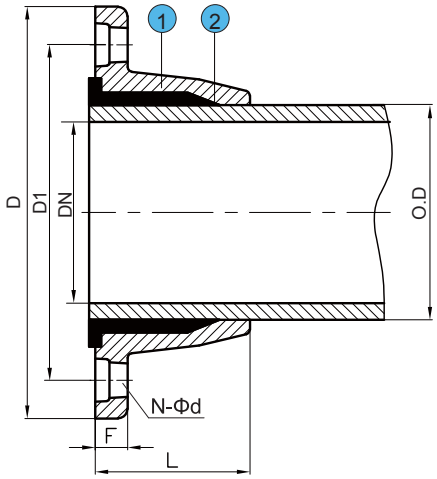

Material Specification:

Item No.	Parts Name	Material	Specification
1	Body	Ductile Iron	GJS500-7
2	Rubber Seal	Rubber	EPDM

Features

- Ductile Iron GGG50 material with FBE coated.
- PN10,PN16 working pressure.
- EPDM or EPDM+Brass Seal Ring.
- Flanges drilling ISO PN 10/16.
- Angular deflection +/- 6°.

Application:

• Drinking water networks. • Fire protection networks. • Irrigation networks .

Dimensions(mm)

DN	Pipe O.D	Length	F	Flange Drilling					
				PN10			PN16		
		L		D	D1	N-Φd	D	D1	N-Φd
50	63	53	20	165	125	4x19	165	125	4x19
60/65	63	53	20	185	135/145	4x19	185	135/145	4x19
60/65	75	57	20	185	135/145	4x19	185	135/145	4x19
80	90	61	20	200	160	8x19	200	160	8x19
100	90	61	20	220	180	8x19	220	180	8x19
100	110	67	20	220	180	8x19	220	180	8x19
125	125	70	20	250	210	8x19	250	210	8x19
125	140	70	20	250	210	8x19	250	210	8x19
150	160	79	21	285	240	8x23	285	240	8x23
200	200	91	21	340	295	8x23	340	295	12x23
200	225	91	21	340	295	8x23	340	295	12x23
250	250	106	23	400	350	12x23	400	355	12x28
250	280	106	23	400	350	12x23	400	355	12x28
300	315	110	26	455	400	12x23	455	400	12x28
400	400	133	27	565	515	16x28	580	525	16x31

Saddle Clamp for PVC Pipe Fig.T1870

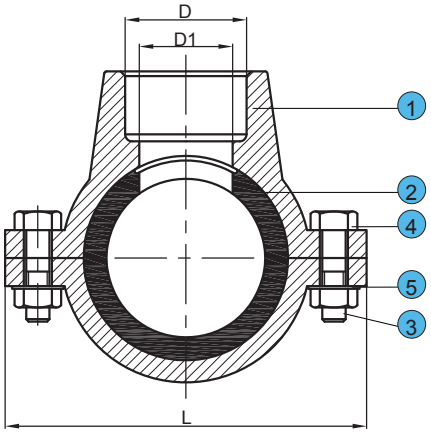

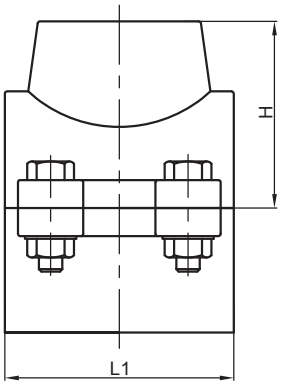

Features

- Allows full screwing to guarantee the saddle waterproof.
- Ductile Iron GGG50 material with FBE coated.
- PN10,PN16 working pressure.
- Equipped with galvanized steel bolts, nuts.
- EPDM or NBR rubber seals .

Material Specification:

Item No.	Parts Name	Material	Specification
1	Body	Ductile Iron	GJS500-7
2	Rubber Seal	Rubber	EPDM
3	Bolt	Zinc Plated Steel	ISO898-1:1999
4	Nut	Zinc Plated Steel	ISO898-2:1992
5	Washer	Zinc Plated Steel	

Dimensions(mm)

DN	D	D1	H	L	L1
63	3/4	38	57	124	100
63	1"	38	57	124	100
63	1 1/4"	40	62	124	100
63	1 1/2"	40	62	124	100
63	2"	40	68	124	100
75	3/4	40	63	135	110
75	1"	40	63	135	110
75	1 1/4"	40	68	135	110
75	1 1/2"	40	68	135	110
75	2"	40	73	135	110
90	3/4	40	71	150	110
90	1"	40	71	150	110
90	1 1/4"	40	75	150	110
90	1 1/2"	40	75	150	110
90	2"	50	80	150	110
110	3/4	40	71	170	120
110	1"	40	71	170	120
110	1 1/4"	40	85	170	120

DN	D	D1	H	L	L1
110	1 1/2"	50	85	170	120
110	2"	50	90	170	120
125	1"	40	87	192	120
125	1 1/4"	40	93	192	120
125	1 1/2"	50	93	192	120
125	2"	50	98	192	120
140	1"	40	96	208	120
140	1 1/4"	40	100	208	120
140	1 1/2"	50	100	208	120
140	2"	50	106	208	120
160	1"	40	106	230	120
160	1 1/4"	40	111	230	120
160	1 1/2"	50	111	230	120
160	2"	50	116	230	120
200	1"	40	132	282	120
200	1 1/4"	40	132	282	120
200	1 1/2"	50	137	282	120
200	2"	50	137	282	120

Gibault Joint Fig.T1880

Fondon Global Gibault Joint is designed to provide an efficient and economical mechanical joint for PVC, PE pipes, it is an ideal fittings for reconnecting pipes after the removal of damaged pipe, or for connecting pipeline fittings in line.

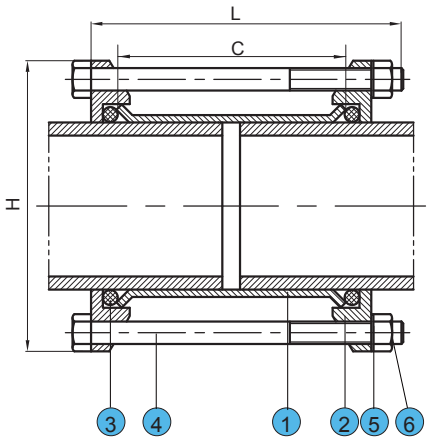

Features

- Ductile Iron GGG50 material with FBE coated.
- PN10,PN16 working pressure.
- Equipped with galvanized steel bolts, nuts.
- EPDM or NBR rubber seals .
- Range of diameters from 40mm to 315 mm.

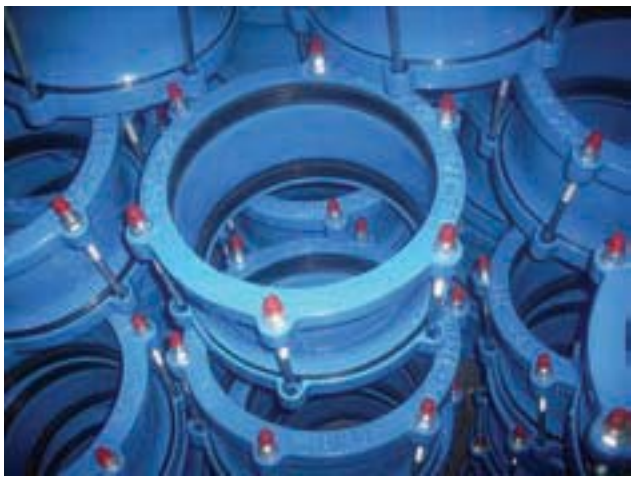

Material Specification:

Item No.	Parts Name	Material	Specification
1	Center Sleeve	Ductile Iron	GJS500-7
2	End Ring	Ductile Iron	GJS500-7
3	Rubber Seal	Rubber	EPDM
4	Bolt	Zinc Plated Steel	ISO898-1:1999
5	Washer	Zinc Plated Steel	
6	Nut	Zinc Plated Steel	ISO898-2:1992

Dimensions(mm)

Pipe Size	H	L	C
40	106	131	97
50	116	131	97
63	137	150	116
75	149	168	116
90	164	154	116
110	184	175	137
125	199	189	137
140	214	189	137
160	234	215	177
180	254	229	177
200	274	229	177
220	294	229	177
225	299	215	177
250	341	241	185
280	359	241	185
315	406	241	185

Dismantling Joint Fig.AC1000

PN10/16 Pressure Ratio

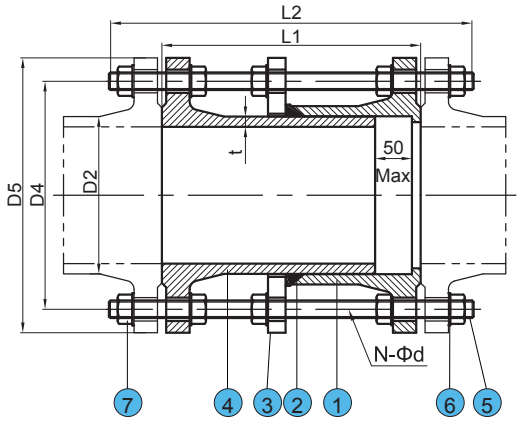

Material Specification:

Item No.	Parts Name	Material	Specification
1	Outer Flange	Ductile Iron	GJS500-7
2	Sealing Ring	Rubber	EPDM
3	Middle Flange	Ductile Iron	GJS500-7
4	Inner Flange	Ductile Iron	GJS500-7
5	Stud	Zinc Plated Steel	ISO898-1:1999
6	Washer	Zinc Plated Steel	
7	Nut	Zinc Plated Steel	ISO898-2:1992

Features

- Ductile Iron GGG50 material with FBE coated .
- PN10,PN16 working pressure.
- Equipped with galvanized steel bolts, nuts.
- EPDM or NBR rubber seals .
- Range of diameters from 80mm to 2200mm.

Dimensions(mm)

DN	Pipe OD	Length		PN10 Flange Drilling			PN16 Flange Drilling			W.T.	Weight (Kg)	
	D2	L1	L2	D4	D5	N-Φd	D4	D5	N-Φd	T	PN10	PN16
80	98	200	310	160	200	8-16	160	200	8-16	7	19	19
100	118	200	310	180	220	8-16	180	220	8-16	7.2	21	22
125	144	200	310	210	250	8-16	210	250	8-16	7.5	25	24
150	170	200	320	240	285	8-20	240	285	8-20	7.8	30	30
200	222	220	340	295	340	8-20	295	340	12-20	8.4	43	42
250	274	230	370	350	400	12-20	355	400	12-24	9	52	52
300	326	250	410	400	455	12-20	410	455	12-24	9.6	72	72
350	378	260	410	460	505	16-20	470	520	16-24	10.2	79	84
400	429	270	430	515	565	16-24	525	580	16-27	10.8	118	129
450	480	270	430	565	615	16-24	585	640	20-27	11.4	163	172
500	532	280	440	620	670	20-24	650	715	20-30	12	180	215
600	635	300	480	725	780	20-27	770	840	20-33	13.2	220	274
700	738	300	480	840	895	24-27	840	910	24-33	14.4	287	367
800	842	320	520	950	1015	24-30	950	1025	24-36	15.6	346	409
900	945	320	520	1050	1115	28-30	1050	1125	28-36	16.8	431	472
1000	1048	340	560	1160	1230	28-33	1170	1255	28-39	18	487	580
1100	1152	340	560	1270	1340	32-33	1270	1355	32-39	19.2	592	668
1200	1255	360	600	1380	1455	32-36	1390	1485	32-45	20.4	801	987
1400	1462	380	630	1590	1675	36-39	1590	1685	36-45	22.8	945	1186
1500	1565	400	665	1700	1785	36-39	1710	1820	36-52	23	1254	1466
1600	1668	400	700	1820	1915	40-45	1820	1930	40-52	25.2	1583	1710
1800	1875	420	730	2020	2115	44-45	2020	2130	44-52	27.6	1680	2011
2000	2082	440	730	2230	2325	48-45	2230	2345	48-56	30	1986	2633
2200	2288	450	750	2440	2550	52-52	2440	2555	52-56	32.4	2779	3200

Dismantling Joint Fig.AC1000

PN25 Pressure Ratio

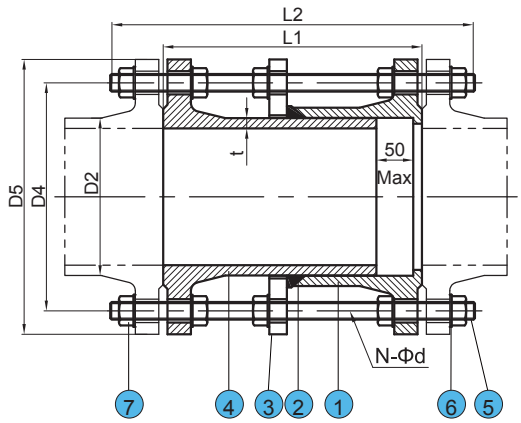

Features

- Ductile Iron GGG50 material with FBE coated .
- PN25 working pressure.
- Equipped with galvanized steel bolts, nuts.
- EPDM or NBR rubber seals .
- Range of diameters from 80mm to 2000mm.

Material Specification:

Item No.	Parts Name	Material	Specification
1	Outer Flange	Ductile Iron	GJS500-7
2	Sealing Ring	Rubber	EPDM
3	Middle Flange	Ductile Iron	GJS500-7
4	Inner Flange	Ductile Iron	GJS500-7
5	Stud	Zinc Plated Steel	ISO898-1:1999
6	Washer	Zinc Plated Steel	
7	Nut	Zinc Plated Steel	ISO898-2:1992

Dimensions(mm)

DN	Pipe OD	Length		PN25 Flange Drilling			W.T.	Weight
	D2	L1	L2	D4	D5	N-Φd	T	Kg
80	98	210	330	160	200	8-19	7	22
100	118	220	340	190	235	8-23	7.2	26
125	144	220	370	220	270	8-28	7.5	31
150	170	230	370	250	300	8-28	7.8	39
200	222	230	370	310	360	12-28	8.4	45
250	274	250	410	370	425	12-31	9	76
300	326	250	410	430	485	16-31	9.6	101
350	378	270	440	490	555	16-34	10.2	118
400	429	280	480	550	620	16-37	10.8	190
450	480	280	480	600	670	20-37	11.4	241
500	532	300	480	660	730	20-37	12	301
600	635	320	520	770	845	20-40	13.2	384
700	738	340	530	875	960	24-43	14.4	520
800	842	360	600	990	1085	24-49	15.6	573
900	945	380	600	1090	1185	28-49	16.8	720
1000	1048	400	650	1210	1320	28-56	18	956
1200	1255	450	720	1420	1530	32-56	20.4	1844
1400	1462	480	770	1640	1755	36-62	22.8	2011
1600	1668	510	815	1860	1975	40-62	25.2	2875
1800	1875	540	865	2070	2195	44-70	27.6	3250
2000	2082	580	930	2300	2425	48-70	30	5133

Dismantling Joint Fig.AC1000

PN40 Pressure Ratio

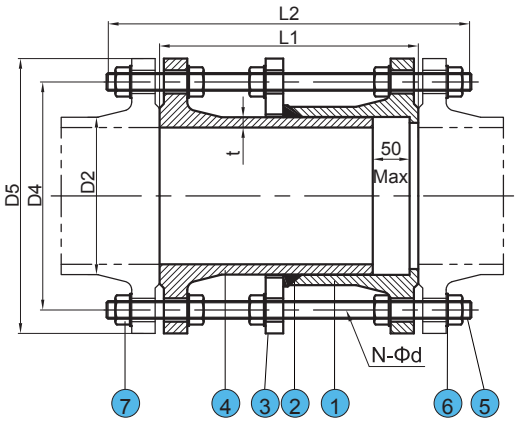

Material Specification:

Item No.	Parts Name	Material	Specification
1	Outer Flange	Ductile Iron	GJS500-7
2	Sealing Ring	Rubber	EPDM
3	Middle Flange	Ductile Iron	GJS500-7
4	Inner Flange	Ductile Iron	GJS500-7
5	Stud	Zinc Plated Steel	ISO898-1:1999
6	Washer	Zinc Plated Steel	
7	Nut	Zinc Plated Steel	ISO898-2:1992

Features

- Ductile Iron GGG50 material with FBE coated .
- PN40 working pressure.
- Equipped with galvanized steel bolts, nuts.
- EPDM or NBR rubber seals .
- Range of diameters from 80mm to 2000mm.

Dimensions(mm)

DN	Pipe OD	Length		PN40 Flange Drilling			W.T.	Weight
	D2	L1	L2	D4	D5	N-Φd	T	Kg
80	98	230	380	160	200	8-19	7	29
100	118	240	390	190	235	8-23	7.2	42
125	144	240	390	220	270	8-28	7.5	49
150	170	250	400	250	300	8-28	7.8	59
200	222	250	400	320	375	12-31	8.4	72
250	274	270	440	385	450	12-34	9	105
300	326	270	440	450	515	16-34	9.6	142
350	378	290	460	510	580	16-37	10.2	164
400	429	300	500	585	660	16-40	10.8	205
450	480	300	500	610	685	20-40	11.4	266
500	532	320	510	670	755	20-43	12	346
600	635	340	550	795	890	20-49	13.2	498
700	738	360	570	900	995	24-49	14.4	615
800	842	380	620	1030	1140	24-56	15.6	755
900	945	380	620	1140	1250	28-56	16.8	1120
1000	1048	420	670	1250	1360	28-56	18	1356
1200	1255	450	720	1460	1575	32-62	20.4	1964
1400	1462	480	770	1680	1795	36-62	22.8	2501
1600	1668	510	815	1900	2025	40-70	25.2	3983
1800	1875	540	865	2130	2255	44-70	27.6	5100
2000	2082	580	930	2360	2485	44-78	30	6205

Dismantling Joint Fig.AC1100

PN10/PN16 Pressure Ratio

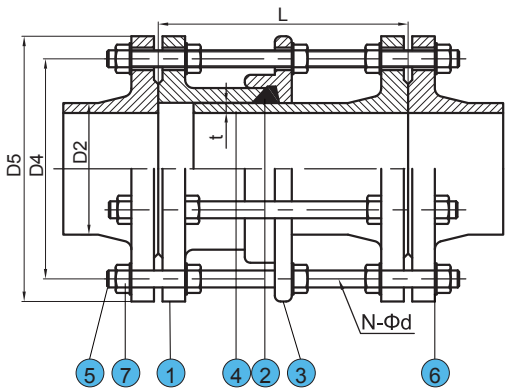

Features

- Ductile Iron GGG50 material with FBE coated .
- PN10,PN16 working pressure.
- Equipped with galvanized steel bolts, nuts.
- EPDM or NBR rubber seals .
- Range of diameters from 80mm to 1200mm.

Material Specification:

Item No.	Parts Name	Material	Specification
1	Outer Flange	Ductile Iron	GJS500-7
2	Sealing Ring	Rubber	EPDM
3	Middle Flange	Ductile Iron	GJS500-7
4	Inner Flange	Ductile Iron	GJS500-7
5	Stud	Zinc Plated Steel	ISO898-1:1999
6	Washer	Zinc Plated Steel	
7	Nut	Zinc Plated Steel	ISO898-2:1992

Dimensions(mm)

DN	Pipe OD (D2)		Length			PN10 Flange Drilling			PN16 Flange Drilling			Weight
	DI	ST	L	Lmin.	Lmax.	D4	D5	N-Φd	D4	D5	N-Φd	Kg
50	66	60.3	210	190	235	125	165	4-18	125	165	4-18	7.9
65	82	76.1	210	190	235	145	185	4-18	145	185	4-18	8.8
80	98	89.1	210	190	235	160	200	8-16	160	200	8-16	9.3
100	118	114.3	210	190	235	180	220	8-16	180	220	8-16	12.4
125	144	139.7	210	190	235	210	250	8-16	210	250	8-16	14.7
150	170	168.3	210	190	235	240	285	8-20	240	285	8-20	21.9
200	222	219.1	210	190	235	295	340	8-20	295	340	12-20	38.5
250	274	273.1	210	190	235	350	400	12-20	355	400	12-24	40.1
300	326	323.9	210	190	235	400	455	12-20	410	455	12-24	48.1
350	378	355.6	275	250	300	460	505	16-20	470	520	16-24	72.9
400	429	406.4	275	250	300	515	565	16-24	525	580	16-27	89.2
450	480	457.2	275	250	300	565	615	16-24	585	640	20-27	102.6
500	532	508	275	250	300	620	670	20-24	650	715	20-30	129
600	635	609.6	275	250	300	725	780	20-27	770	840	20-33	163
700	738	711.2	275	250	300	840	895	24-27	840	910	24-33	173
800	842	812.8	275	250	300	950	1015	24-30	950	1025	24-36	208.1
900	945	914.4	275	250	300	1050	1115	28-30	1050	1125	28-36	231
1000	1048	1016	300	275	325	1160	1230	28-33	1170	1255	28-39	310.1
1200	1255	1219.2	300	275	325	1380	1455	32-36	1390	1485	32-45	512

Welded Dismantling Joint Fig.AC1200

PN10/PN16 Pressure Ratio

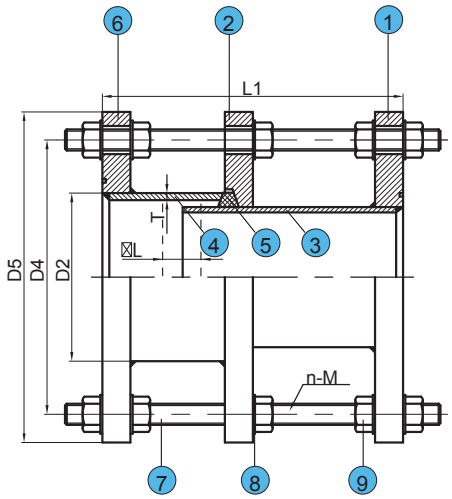

Material Specification:

Item No.	Parts Name	Material	Specification
1	Inter Flange	Carbon Steel	20#
2	Middle Flange	Carbon Steel	20#
3	Inter pipe	Carbon Steel	20#
4	Outer pipe	Carbon Steel	20#
5	Sealing Ring	Rubber	EPDN
6	Outer Flange	Carbon Steel	20#
7	Stud	Zinc Plated Steel	DIN9758.8
8	Washer	Zinc Plated Steel	DIN125A
9	Nut	Zinc Plated Steel	DIN9348

Features

- Carbon steel or stainless steel are all available upon request.
- PN10,PN16 working Pressure.
- Equipped with galvanized steel studs,nuts and washer
- Triangle EPDM or NBR sealing ring.
- Range of Diameter from DN40-DN1600.

Dimensions(mm)

DN	L	⊠L	PN10 Flange Drilling				PN16 Flange Drilling				Weight(Kg)	
			D5	D4	nxM	b	D5	D4	nxM	b	PN10	PN16
40	130	25	150	110	4xM16	16	150	110	4xM16	16	9	9
50	170	25	165	125	4xM16	18	165	125	4xM16	18	11	11
65	170	25	185	145	4xM16	18	185	145	4xM16	18	13	13
80	170	25	200	160	8xM16	18	200	160	8xM16	18	17	17
100	200	25	220	180	8xM16	20	220	180	8xM16	20	21	22
125	200	25	250	210	8xM16	20	250	210	8xM16	22	26	28
150	200	25	285	240	8xM20	22	285	240	8xM20	22	36	38
200	220	25	340	295	8xM20	24	340	295	12xM20	24	52	56
250	220	25	395	350	12xM20	24	405	355	12xM24	26	72	82
300	220	25	445	400	12xM20	26	460	410	12xM24	28	82	96
350	230	25	505	460	16xM20	26	520	470	16xM24	30	195	130
400	230	25	565	515	16xM24	28	580	525	16xM27	32	132	174
500	260	25	670	620	20xM24	30	715	650	20xM30	34	170	240
600	260	25	780	725	20xM27	30	840	770	20xM33	36	253	350
700	290	30	895	840	24xM27	32	919	840	24xM33	38	315	390
800	290	30	1015	950	24xM30	34	1025	950	24xM36	40	410	480
900	300	30	1115	1050	28xM30	36	1125	1050	28xM36	42	505	580
1000	300	30	1230	1160	28xM33	38	1255	1170	28xM39	44	620	760
1200	320	30	1455	1380	32xM36	40	1485	1390	32xM39	48	840	1170
1400	360	30	1675	1590	36xM39	44					1150	
1600	400	30	1915	1820	40xM45	48					1650	

Welded Dismantling Joint Fig.AC1200

PN25 Pressure Ratio

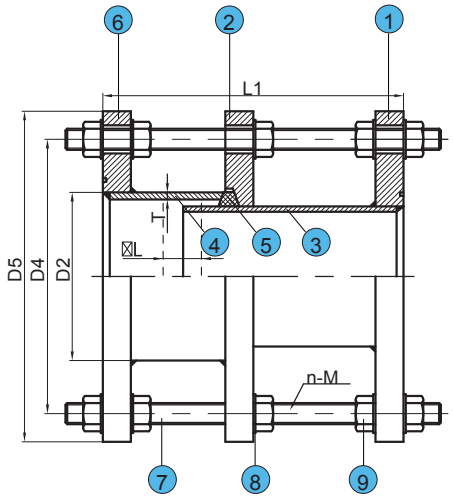

Features

- Carbon steel or stainless steel are all available upon request.
- PN10,PN16,PN25,PN40 working Pressure.
- Equipped with galvanized steel studs,nuts and washer
- Triangle EPDM or NBR sealing ring.
- Range of Diameter from DN40-DN1600.

Material Specification:

Item No.	Parts Name	Material	Specification
1	Inter Flange	Carbon Steel	20#
2	Middle Flange	Carbon Steel	20#
3	Inter pipe	Carbon Steel	20#
4	Outer pipe	Carbon Steel	20#
5	Sealing Ring	Rubber	EPDN
6	Outer Flange	Carbon Steel	20#
7	Stud	Zinc Plated Steel	DIN9758.8
8	Washer	Zinc Plated Steel	DIN125A
9	Nut	Zinc Plated Steel	DIN9348

Dimensions(mm)

DN	L	⊠L	PN25 Flange Drilling			b	Weight
			D5	D4	nxM		Kg
40	160	25	150	110	4xM16	18	10
50	180	25	165	125	4xM16	20	12
65	180	25	185	145	8xM16	22	17
80	200	25	200	160	8xM18	24	21
100	230	25	235	190	8xM20	24	29
125	230	25	270	220	8xM24	26	48
150	230	25	300	250	8xM24	28	58
200	250	25	360	310	12xM24	30	82
250	250	25	425	370	12xM27	32	108
300	280	25	485	430	16xM27	34	142
350	280	25	555	490	16xM30	38	200
400	280	25	620	550	16xM33	40	250
500	300	25	730	660	20xM33	44	320
600	300	25	845	770	20xM36	46	450
700	340	30	960	875	24xM39	46	580
800	360	30	1085	990	24xM45	50	800
900	380	30	1185	1090	28xM45	54	920
1000	400	30	1320	1210	28xM52	58	1280
1200	420	30	1530	1420	32xM52	62	1970

FITTINGS FOR PVC PIPES

Double Socket 11.25° Bend
Fig.P214

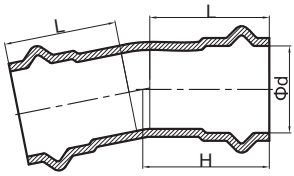

φd	L	H
50	90	100.7
63	95	108.6
75	100	119.6
90	105	116.5
110	115	130.4
125	125	151.4
140	130	141.4
160	145	159.3
180	155	186.3
200	155	177.3
225	155	180.2
250	175	204
280	185	227.9
315	190	229.9

Double Socket 22.5° Bend
Fig.P213

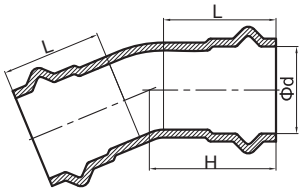

φd	L	H
50	90	113.8
63	95	112.8
75	100	119.8
90	105	126.8
110	115	136.8
125	125	152.7
140	130	155.7
160	145	174.7
180	155	211.6
200	155	188.7
225	155	188.7
250	175	209.6
280	185	235.6
315	190	258.5

Double Socket 45° Bend
Fig.P212

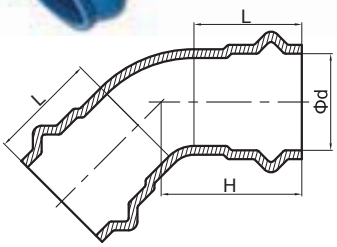

φd	L	H
50	90	112.7
63	95	125.4
75	100	125
90	105	133
110	115	153
125	125	168
140	130	178
160	145	201
180	155	222.7
200	155	213
225	155	228.4
250	175	260
280	185	292
315	190	298

Double Socket 90° Bend
Fig.P211

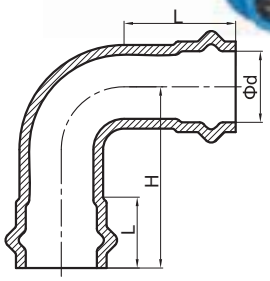

φd	L	H
50	90	140
63	95	150
75	1 00	163
90	105	175
110	115	195
125	125	212.5
140	130	217.5
160	145	255
180	155	280
200	155	290
225	155	295
250	175	332.5
280	185	360
315	190	390

Caps-Threaded Branch
Fig.P611S

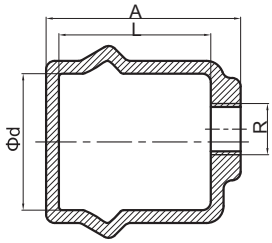

φd	R	A	L
50	1"	110	90
63	1"	115	95
75	1"	125	100
90	1"	130	105
110	2"	140	115
125	2"	165	125
140	2"	160	130
160	2"	175	145
180	2"	190	155
200	2"	190	155
225	2"	190	155
250	2"	205	175
280	2"	225	185
315	2"	225	190

Caps
Fig.P611

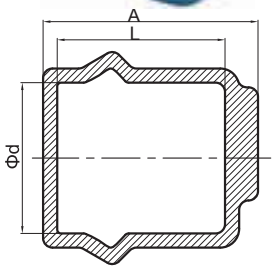

φd	A	L
50	110	90
63	115	95
75	125	100
90	130	105
110	140	115
125	165	125
140	160	130
160	175	145
180	190	155
200	190	155
225	190	155
250	205	175
280	225	185
315	225	190

FITTINGS FOR PVC PIPES

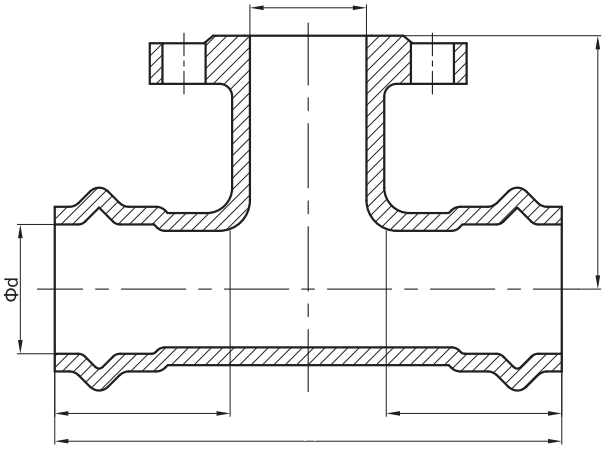

Double Socket Tee -Flanged Branch Fig.P312F

Dimensions(mm)

D N	φd	A	L	H
40	50	240	90	135
40	63	240	95	130
50	63	250	95	140
60	63	270	95	135
40	75	266	100	135
50	75	276	100	140
60	75	286	100	140
65	75	291	100	140
40	90	270	105	160
50	90	280	105	160
60	90	290	105	160
65	90	295	105	160
80	90	310	105	160
40	110	290	115	170
50	110	300	115	170
60	110	310	115	175
65	110	315	115	170
80	110	330	115	170
100	110	350	115	170
40	125	320	125	160
50	125	330	125	160
60	125	340	125	160
80	125	360	125	170
100	125	380	125	180
125	125	405	125	180
40	140	310	130	175
50	140	320	130	176
60	140	330	130	200
65	140	335	130	200
80	140	350	130	190

D N	φd	A	L	H
100	140	370	130	200
125	140	395	130	205
40	160	340	145	200
50	160	360	145	200
60	160	360	145	215
65	160	365	145	215
80	160	390	145	200
100	160	400	145	210
125	160	425	145	220
150	160	450	145	220
60	180	410	155	210
100	180	450	155	210
150	180	500	155	220
200	180	550	155	240
50	200	380	155	220
60	200	390	155	220
80	200	410	155	223
100	200	430	155	240
125	200	455	155	230
150	200	480	155	270
200	200	534	155	280
60	225	390	155	240
80	225	410	155	250
100	225	430	155	250
125	225	455	155	245
150	225	480	155	250
200	225	530	155	250
60	250	430	175	250
80	250	450	175	250
100	250	470	175	255

D N	φd	A	L	H
150	250	520	175	265
200	250	570	175	275
250	250	620	175	285
80	280	470	185	280
100	280	490	185	290
150	280	540	185	290
200	280	590	185	285
250	280	640	185	290
80	315	480	190	305
100	315	500	190	310
150	315	550	190	310
200	315	600	190	290
250	315	650	190	305
300	315	700	190	310
80	355	550	205	330
100	355	570	205	330
150	355	620	205	330
200	355	670	205	330
250	355	720	205	350
300	355	770	205	350
350	355	820	205	350
100	400	580	230	350
150	400	630	230	350
200	400	680	230	350
300	400	780	230	350
400	400	880	230	360
80	450	560	230	340
100	450	580	230	355
150	450	630	230	360
200	450	680	230	365

FITTINGS FOR PVC PIPES

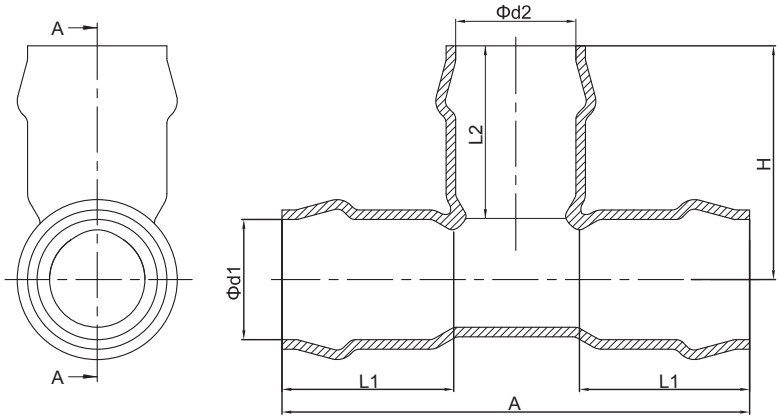

All Socket Tee Fig.P311

Dimensions(mm)

Φd1	Φd2	A	L1	H	L2
63	50	245	95	125	90
63	63	255	95	125	95
75	63	275	100	135	95
75	75	291	100	143	100
90	63	275	105	145	95
90	75	290	105	150	100
90	90	308	105	155	105
110	63	300	115	155	95
110	75	315	115	165	100
110	90	328	115	165	105
110	110	345	113	175	113
125	63	340	125	155	95
125	75	345	125	163	100
125	90	360	125	165	105
125	110	375	125	175	115
125	125	393	125	190	125
140	63	325	130	170	95
140	75	335	130	175	100
140	90	350	130	180	105
140	110	370	130	185	115
140	125	370	130	205	125
140	140	390	130	200	130
160	63	350	145	180	95
160	75	365	145	190	100
160	90	380	145	190	105
160	110	400	140	200	115
160	125	415	145	210	125
160	140	425	145	210	130
160	160	446	140	225	140
180	110	440	155	210	115
180	140	465	155	210	130
180	160	480	155	230	145
180	180	500	155	250	155
200	75	390	155	210	100
200	90	410	155	210	105
200	110	430	155	220	115

Φd1	Φd2	A	L1	H	L2
200	125	440	155	230	125
200	140	455	155	230	130
200	160	480	155	245	140
200	180	510	155	260	155
200	200	520	155	260	155
225	90	410	155	215	105
225	110	430	155	230	115
225	125	450	155	245	125
225	140	455	155	240	130
225	160	480	155	255	145
225	180	490	155	275	155
225	200	520	155	270	155
225	225	540	155	270	155
250	90	450	175	235	105
250	110	470	175	245	115
250	140	510	175	260	130
250	160	520	175	270	145
250	200	560	175	285	155
250	250	605	175	305	175
280	90	490	185	250	105
280	110	510	185	260	115
280	160	560	185	285	145
280	200	610	185	300	155
280	225	620	185	300	155
280	250	655	185	320	175
280	280	675	185	340	185
315	90	480	190	265	105
315	110	500	190	275	115
315	140	540	190	290	130
315	160	550	190	300	145
315	200	610	190	330	155
315	225	610	190	315	155
315	250	640	190	355	175
315	280	665	190	355	185
315	315	700	190	350	190

FITTINGS FOR PVC PIPES

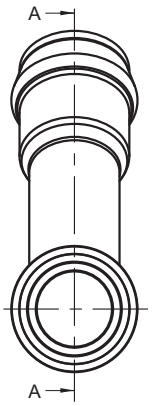

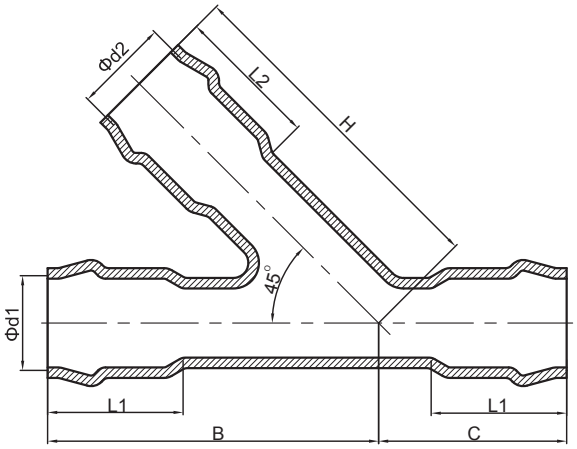

All Socket Tee 45° Fig.P312

Dimensions(mm)

Φd1	Φd2	B	C	L1	H	L2
63	63	220	125	95	225	95
90	90	235	140	105	235	105
110	90	250	140	115	250	105
110	110	270	155	115	270	115
140	90	285	145	130	265	105
140	110	300	160	130	280	115
140	140	315	180	130	315	130
160	90	305	145	145	280	105
160	110	320	155	145	295	115
160	140	355	175	145	330	130
160	160	345	190	145	345	145
225	90	365	145	155	325	105
225	110	380	160	155	335	115
225	140	400	180	155	375	130
225	160	415	190	155	390	145
225	225	450	230	155	450	155
280	110	440	170	185	375	115
280	160	470	200	185	430	145
280	225	315	240	185	490	155
280	280	550	275	185	550	185
315	90	430	205	190	385	105
315	110	460	205	190	410	115
315	160	510	205	190	480	145

THE FITTINGS FOR PVC PIPES

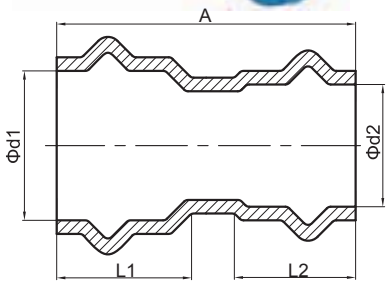

Double Socket Taper Fig.P511

Dimensions(mm)

Φd1	Φd2	A	L1	L2
63	50	200	95	90
75	63	210	100	95
90	63	215	105	95
90	75	225	105	100
110	63	240	115	95
110	75	250	115	100
110	90	250	115	105
125	63	280	125	95
125	75	290	125	100
125	90	290	125	105
125	110	305	125	115
140	90	275	130	105
140	110	280	130	115
140	125	290	130	125
160	90	290	145	105
160	110	300	145	115
160	125	310	145	125
160	140	310	145	130
180	140	350	155	130
180	160	350	155	145
200	90	310	155	105
200	110	310	155	115
200	140	340	1 55	130
200	160	340	155	145
200	180	360	155	155
225	110	315	155	115
225	140	325	155	130
225	160	340	155	145
225	200	350	155	155
250	110	350	175	115
250	160	370	175	145
250	200	390	175	155
250	225	400	175	155
280	160	390	185	145
280	225	410	185	155
280	250	420	185	175
315	200	400	190	155
315	225	400	190	155
315	250	420	190	175

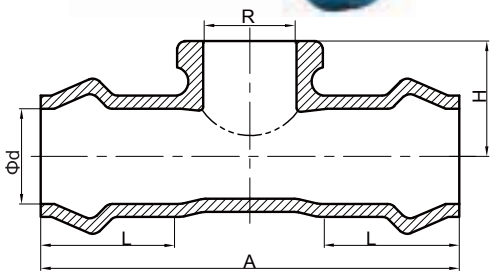

Double Socket Collar-Threaded Branch Fig.P312S

Dimensions(mm)

Φd	R	A	L	H
50	1"	220	90	60
63	1"	230	95	60
63	1 1/4"	240	95	60
63	1 1/2"	245	95	60
63	2"	255	95	60
75	1"	246	100	64
75	1 1/4"	256	100	64
75	1 1/2"	260	100	64
75	2"	275	100	64
90	1"	250	105	80
90	1 1/4"	260	105	80
90	1 1/2"	265	105	80
90	2 "	275	105	80
90	3"	305	105	95
110	1"	270	115	90
110	1 1/4"	280	115	90
110	1 1/2"	285	115	90
110	2"	295	115	90
110	3"	325	115	120
110	4"	355	115	115
125	1"	310	125	95
125	1 1/4"	310	125	95
125	1 1/2"	320	125	95
125	2"	330	125	100
140	1"	290	130	105
140	1 1/4"	300	130	105
140	1 1/2"	305	130	105
140	2"	315	130	105
160	1"	320	145	115
160	1 1/4"	330	145	115
160	1 1/2"	335	145	115
160	2"	345	145	115
160	3"	375	145	135
180	1"	370	155	130
180	2"	390	155	130
200	1"	360	155	135
200	2"	380	155	140
225	1"	350	155	150
225	1 1/4"	360	155	150
225	1 1/2"	365	155	150
225	2"	375	155	150
250	1"	390	175	160
250	2"	415	175	165
280	2"	460	185	175
315	2"	450	190	195

THE FITTINGS FOR PVC PIPES

Flanged Socket Fig.P111

Dimensions(mm)

DN	Φd	A	L
40	50	100	90
50	63	100	95
60	63	110	95
60	75	110	100
65	63	110	95
65	75	110	100
80	75	120	100
80	90	120	105
80	110	130	115
80	160	200	145
100	90	120	105
100	110	130	115
100	125	145	125
100	140	175	130
100	160	190	145
125	110	145	115
125	125	145	125
125	140	145	130
150	110	150	115
150	140	160	130
150	160	170	145
150	180	180	155
200	160	185	145
200	180	190	155
200	200	192	155
200	225	190	155
200	219	190	155
250	250	220	175
250	280	230	185
300	315	240	190
300	355	260	205

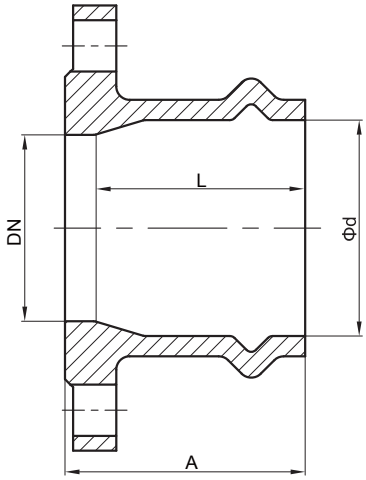

Flanged Spigot Fig.P112

Dimensions(mm)

DN	Φd	A	L
40	50	120	90
50	63	125	95
65	75	130	100
80	90	125	95
100	90	130	95
100	110	130	95
125	125	170	135
125	140	170	135
150	160	160	120
200	180	170	130
200	200	170	130
200	225	205	170
250	250	200	150
250	280	245	200
300	315	200	155

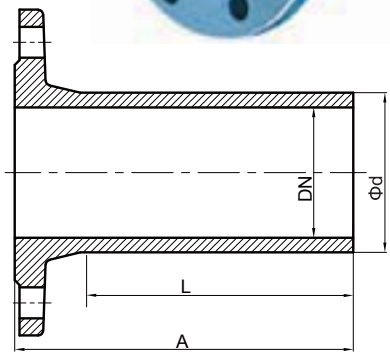

Flanged Pipe ISO2531/BS EN545/BS EN598

Flanged pipes with screwed-on flanges

k9,k12

DN80-DN1200

L,L1to be specified

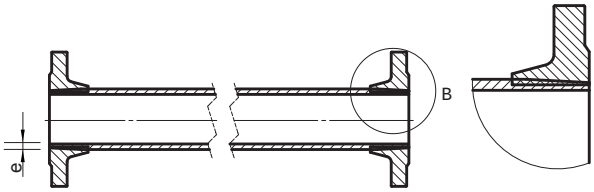

Flanged pipes with cast-on flanges

k9,k12

DN80-DN1200

L≤1200mm

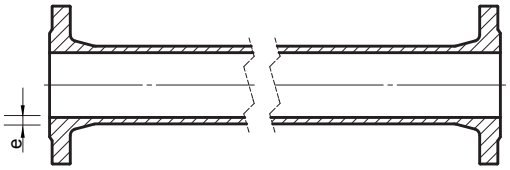

Flanged pipes with welded-on flanges

k9

DN80-DN1200

L,L1to be specified

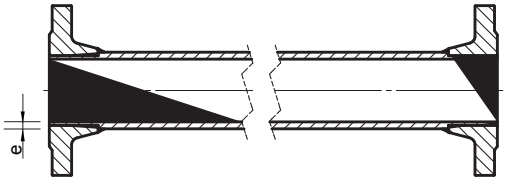

Nominal Diameter	Body						Weight of Flange				
	k=9		k=12		k=14		Welding Flange				Puddle Flange
DN	e/mm	kg/m	e/mm	kg/m	e/mm	kg/m	PN10	PN16	PN25	PN40	
80	6	12.2	7	14.1	8.1	16.1	3.5	3.5	3.5	3.5	2.9
100	6.1	15.1	7.2	17.7	8.4	20.4	4	4	4.5	4.5	3.3
150	6.3	22.8	7.8	28	9.1	32.4	6.1	6.1	7.1	9.2	5.1
200	6.4	30.6	8.4	39.7	9.8	46.1	8.5	8.3	10.4	15.7	6.9
250	6.8	40.2	9	52.8	10.5	61.3	11.8	11.4	15.3	25.4	9.6
300	7.2	50.8	9.6	67.3	11.2	78.1	15.6	15.2	20.8	36.3	12.6
350	7.7	63.2	10.2	83.1	11.9	96.5	17.6	20.7	29	—	17.4
400	8.1	75.5	10.8	100	12.6	116.2	20.5	26.1	37.4	—	22.2
450	8.6	89.7	11.4	118.3	13.3	137.5	24.8	33.6	47.2	—	28.1
500	9	104.3	12	138.2	14	160.6	27.6	42.8	54.5	—	37.7
600	9.9	137.1	13.2	181.8	15.4	211.3	38.4	64.9	79.1	—	57.4
700	10.8	173.9	14.4	230.8	16.8	268.4	50.2	65.3	—	—	58
800	11.7	215.2	15.6	285.5	18.2	332.1	66.7	85.9	—	—	77
900	12.6	260.2	16.8	345.4	19.6	401.7	78.7	102.6	—	—	92
1000	13.5	309.3	18	410.6	21	477.7	98.6	140.1	—	—	127.4
1200	15.3	420.1	20.4	557.8	23.8	649	144.2	208.5	—	—	192.9
1400	17.1	547.2	22.8	726.8	26.6	845.7	178.2	246.3	—	—	231.5
1600	18.9	690.3	25.2	916.9	29.4	953.2	244.7	346.7	—	—	331.1
1800	20.7	850.1	27.6	1129.3	32.2	1314.2	283.5	409.4	—	—	393.7
2000	22.5	1026.3	30	1363.4	35	1586.8	336.4	489.2	—	—	474.5

ISO2531/BS EN545/BS EN598

Flanged Fittings

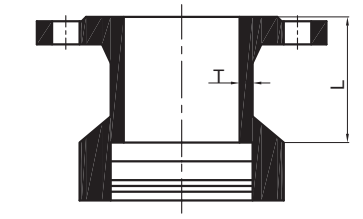

T Style

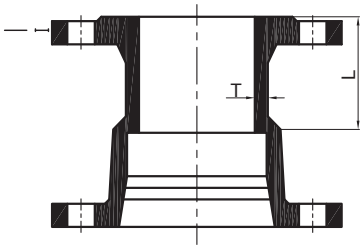

K Style

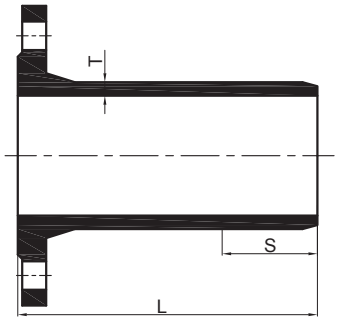

Flanged Socket Fig.F111

Dimensions(mm)

DN	T	L	Mass (kg)					
			T			K		
			PN10	PN16	PN25	PN10	PN16	PN25
80	7	130	7.4	7.4	7.4	9.3	9.3	9.3
100	7.2	130	9.0	9.0	9.5	1 1 .4	11.4	12.4
150	7.8	135	14.2	14.2	15.2	18.0	18.0	19.0
200	8.4	140	20.5	20.0	22.0	24.5	24.0	26.0
250	9	145	28.0	27.5	31.5	32.5	32.0	35.5
300	9.6	150	37.0	36.5	42.0	44.5	44.0	49.5
350	10.2	155	45.0	48.0	56.0	53.0	55.5	63.0
400	10.8	160	55.0	60	71.0	64.0	68.0	78.5
450	11.4	165	70.5	78.0	88.5	74.5	82.0	92.5
500	12	170	78	93	104.0	87.0	100.0	110.0
600	13.2	180	108	135	149	115	138	149
700	14.4	190	144	159	216	162	174	211
800	15.6	200	189	208	287	205	220	274
900	16.8	210	235	258	356	252	271	341
1000	18	220	293	324	458	317	351	458
1100	19.2	230	406.4	413.8	550	377	412	440
1200	20.4	240	456	521	664	450	505	664
1400	22.8	310	654	723	882	654	723	882
1500	24	320	773	857	939	773	857	920
1600	25.2	330	887	989		897	999	1176

Flanged Spigot Fig.F112

Dimensions(mm)

DN	T	Flanged Spigot				
		L	s	Mass (kg)		
				PN10	PN16	PN25
80	7	350	215	7.8	7.8	7.8
100	7.2	360	215	9.6	9.6	10.2
150	7.8	380	225	15.6	15.6	16.6
200	8.4	400	230	22.5	22.5	24.5
250	9	420	240	32	31.5	35.5
300	9.6	440	250	43	42.5	47.5
350	10.2	460	260	52	55	64
400	10.8	480	270	64	70	81
450	11.4	500	280	78.5	87	98
500	12	520	290	94	109	121
600	13.2	560	310	133	159	173
700	14.4	600	330	179	194	
800	15.6	600	330	226	245	
900	16.8	600	330	272	295	
1000	18	600	330	328	369	
1100	19.2	600	330	394	430	
1200	20.4	600	330	456	520	
1400	22.8	710	390	664	732	
1500	24	745	410	812	900	
1600	25.2	780	430	922	1024	

Flanged Fittings ISO2531/BS EN545/BS EN598

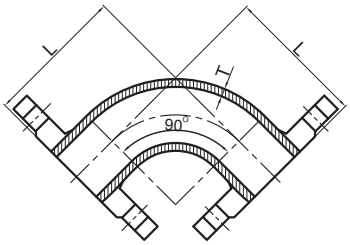

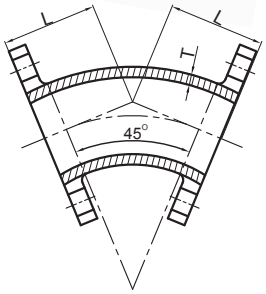

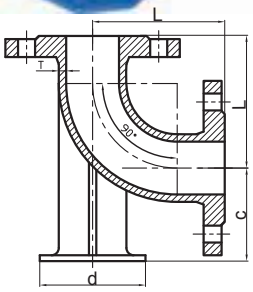

Double-Flanged Bend 90°/45° Fig.F211/F212

Double-Flanged 90° Duckfoot Bend Fig.F112

Dimensions(mm)

DN	T	90° Bend				45° Bend				90° Duckfoot Bend					
		L	Mass(kg)			L	Mass(kg)			L	c	d	Mass(kg)		
			PN10	PN16	PN25		PN10	PN16	PN25				PN10	PN16	PN25
80	7	165	9.6	9.6	9.6	130	9.3	9.3	9.3	165	110	180	14.1	14.1	14.1
100	7.2	180	11.9	11.9	12.9	140	11.3	11.3	12.4	180	125	200	17.3	17.8	18.8
150	7.8	220	20	20	22	160	18.5	18.5	20.5	220	160	250	30	30	32
200	8.4	260	31	30.5	34.5	180	27.5	27	31	260	190	300	46.5	46	50.5
250	9	350	50	49.5	57	350	55	54	62	350	225	350	75	75	82
300	9.6	400	70	70	81	400	76	77	88	400	255	400	106	105	116
350	10.2	450	90	96	113	300	78	83	89	450	290	450	139	145	162
400	10.8	500	116	127	149	325	96	107	129	500	320	500	178	189	212
450	11.4	550	147	163	184	350	120	135	157	550	355	550	245	261	283
500	12	600	181	211	235	375	145	175	198	600	385	600	283	313	337
600	13.2	700	272	325	353	425	212	266	294	700	450	700	428	481	509
700	14.4	800	386	416		480	296	326		800	515	800	684	708	
800	15.6	900	533	572		530	403	442		900	580	900	944	974	
900	16.8	1000	698	745		580	519	567		1000	645	1000	1252	1290	
1000	18	1100	907	990		630	668	751		1100	710	1100	1629	1698	
1100	19.2	1200	1164	1234		695	857	927		1200	775	1200	2080	2150	
1200	20.4	1300	1490	1619		750	1050	1178		1300	840	1300	2599	2709	
1400	22.8	1350	2199	2335		775	1388	1524							
1500	24.0	1400	2273	2449		810	1677	1853							
1600	25.2	1450	2663	2841		845	1915	2119							

ISO2531/BS EN545/BS EN598 **Flanged Fittings**

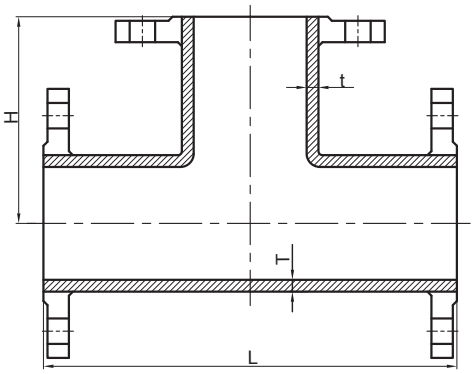

All Flanged Tee Fig.F311

Dimensions(mm)

DNXdn	T	L	t	H	Mass(kg)		
					PN10	PN16	PN25
80X80	7.0	330	7.0	165	15.6	15.6	15.6
100X80	7.2	360	7.0	175	18.4	18.4	19.5
100X100	7.2	360	7.2	180	19.4	19.4	21
150X80	7.8	440	7.0	205	28.5	28.5	31
150X100	7.8	440	7.2	210	29.5	29.5	32
150X150	7.8	440	7.8	220	32.5	32.5	36
200X80	8.4	520	7.0	235	42	41.5	46
200X100	8.4	520	7.2	240	43	42	47.5
200X150	8.4	520	7.8	250	46	45.5	51
200X200	8.4	520	8.4	260	49.5	49	56
250X80	9.0	700	7	270	49.7	49.3	56.7
250X100	9.0	700	7.2	275	68	67	75
250X150	9.0	700	7.8	300	73.5	71	81
250X200	9.0	700	8.4	325	76	75	85
250X250	9.0	700	9.0	350	82	81	93
300X100	9.6	800	7.2	300	94	93	105
300X150	9.6	800	7.8	325	98	97	109
300X200	9.6	800	8.4	350	102	101	114
300X250	9.6	800	9.0	375	109	108	121
300X300	9.6	800	9.6	400	116	115	131
350X100	10.2	850	7.2	325	116	122	139
350X150	10.2	850	7.8	325	120	126	143
350X200	10.2	850	8.4	325	121	128	146
350X250	10.2	850	9.0	325	128	134	154
350X300	10.2	850	9.6	425	140	145	166
350X350	10.2	850	10.2	425	142	151	176
400X100	10.8	900	7.2	350	143	154	177
400X150	10.8	900	7.8	350	149	158	181
400X200	10.8	900	8.4	350	148	159	184
400X250	10.8	900	9.0	350	151	161	198

DNXdn	T	L	t	H	Mass(kg)		
					PN10	PN16	PN25
400X300	10.8	900	9.6	400	168	177	204
400X350	10.8	900	10.2	450	170	183	215
400X400	10.8	900	10.8	450	174	191	225
450X100	11.4	950	7.2	375	177	193	215
450X150	11.4	950	7.8	375	180	196	219
450X200	11.4	950	8.4	375	183	199	220
450X250	11.4	950	9	375	194	210	237
450X300	11.4	950	9.6	475	199	215	242
450X350	11.4	950	10.2	475	207	227	260
450X400	11.4	950	10.8	475	210	230	263
450X450	11.4	950	11.4	475	216	240	272
500X100	12	1000	7.2	400	210	241	265
500X150	12	1000	7.8	400	214	243	269
500X200	12	1000	8.4	400	215	245	271
500X250	12	1000	9	400	218	258	280
500X300	12	1000	9.6	500	227	264	287
500X350	12	1000	10.2	500	239	268	298
500X400	12	1000	10.8	500	242	276	311
500X450	12	1000	11.4	500	249	298	327
500X500	12	1000	12	500	252	297	332
600X100	13.2	1100	7.2	450	301	340	352
600X150	13.2	1100	7.8	450	303	356	370
600X200	13.2	1100	8.4	450	305	358	388
600X250	13.2	1100	9	450	307	360	392
600X300	13.2	1100	9.6	550	328	375	404
600X350	13.2	1100	10.2	550	329	380	413
600X400	13.2	1100	10.8	550	329	387	427
600X450	13.2	1100	11.4	550	338	417	448
600X500	13.2	1100	12	550	349	420	464
600X600	13.2	1100	13.2	550	355	434	477

Flanged Fittings ISO2531/BS EN545/BS EN598

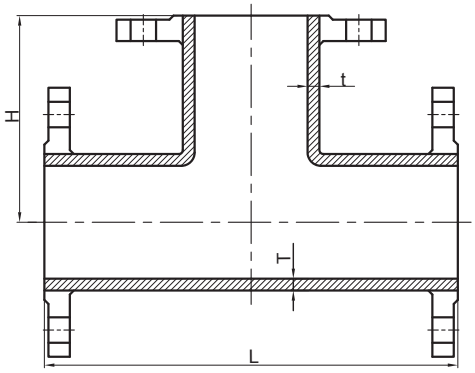

All Flanged Tee Fig.F311

Dimensions(mm)

DNXdn	T	L	t	H	Mass(kg)	
					PN10	PN16
700X100	14.4	540	7.2	510	253	295
700X150	14.4	595	7.8	515	255	296
700X200	14.4	650	8.4	525	258	298
700X250	14.4	705	9	530	289	320
700X300	14.4	760	9.6	540	319	342
700X400	14.4	870	10.8	555	343	379
700X500	14.4	980	12	570	442	481
700X600	14.4	1200	13.2	585	476	523
700X700	14.4	1200	14.4	600	477	523
800X100	15.6	580	7.2	570	345	383
800X150	15.6	585	7.8	575	349	387
800X200	15.6	690	8.4	585	352	390
800X300	15.6	800	9.6	600	413	443
800X400	15.6	910	10.8	615	441	484
800X500	15.6	1020	12	630	561	599
800X600	15.6	1350	13.2	645	613	678
800X700	15.6	1350	14.4	660	663	711
800X800	15.6	1350	15.6	675	657	715
900X100	16.8	620	7.2	630	428	476
900X150	16.8	675	7.8	635	432	480
900X200	16.8	730	8.4	645	436	484
900X300	16.8	840	9.6	660	523	569
900X400	16.8	950	10.8	675	541	594
900X500	16.8	1060	12	690	726	784
900X600	16.8	1500	13.2	705	787	860
900X700	16.8	1500	14.4	720	843	901

DNXdn	T	L	t	H	Mass(kg)	
					PN10	PN16
900X800	16.8	1560	15.6	735	860	913
900X900	16.8	1500	16.8	750	853	924
1000X100	18	660	7.2	690	524	572
1000X150	18	715	7.8	695	534	582
1000X200	18	770	8.4	705	546	629
1000X300	18	880	9.6	720	651	739
1000X400	18	990	10.8	735	668	755
1000X500	18	1100	12	750	955	1007
1000X600	18	1650	13.2	765	1007	1116
1000X700	18	1650	14.4	780	1067	1152
1000X800	18	1650	15.6	795	1085	1168
1000X900	18	1650	16.8	810	1095	1219
1000X1000	18	1650	18	825	1105	1229
1200X100	20.4	660	7	810	996	1082
1200X150	20.4	715	7.8	815	998	1084
1200X200	20.4	775	8.4	825	1000	1086
1200X300	20.4	890	9.6	840	1004	1160
1200X400	20.4	1010	10.8	855	1008	1122
1200X500	20.4	1125	12	870	1095	1250
1200X600	20.4	1240	13.2	885	1101	1256
1200X700	20.4	1355	14.4	900	1279	1423
1200X800	20.4	1470	15.6	915	1291	1439
1200X900	20.4	1585	16.8	930	1427	1662
1200X1000	20.4	1700	18	945	1494	1664
1200X1200	20.4	1935	20.4	975	1806	1970

ISO2531/BS EN545/BS EN598 **Flanged Fittings**

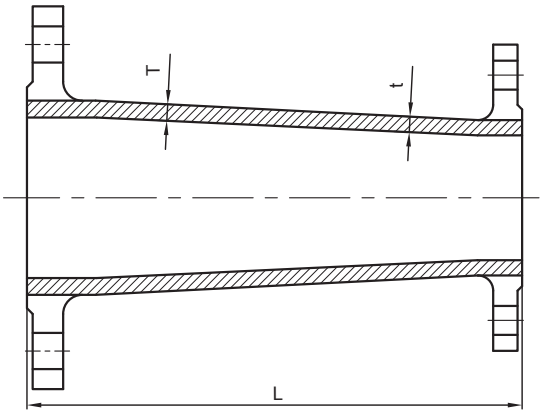

Double Flanged Taper Fig.F511

Dimensions(mm)

DNXdn	T	t	L	Mass(kg)		
				PN10	PN16	PN25
100X80	7.2	7.0	200	9.3	9.3	9.3
150X80	7.8	7.0	400	16.4	16.4	17.4
150X100	7.8	7.2	300	15.3	15.3	16.8
200X100	8.4	7.2	600	27.5	27.5	30.0
200X150	8.4	7.8	300	22	21.5	31.5
220X150	9.0	7.8	600	390	39.0	43.5
250X200	9.0	8.4	300	30	29.5	35.5
300X100	9.6	7.2	700	50.5	50.5	57
300X150	9.6	7.8	650	48.5	48.5	55
300X200	9.6	8.4	600	52.0	51.5	59
300X250	9.6	9.0	300	40.5	39.5	49
350X200	10.2	8.4	650	61.5	64.0	4.0
350X250	10.2	9.0	600	65.5	67.5	79.0
350X300	10.2	9.6	300	49.5	52.5	66
400X200	10.8	8.4	700	73.5	77.5	90.5
400X250	10.8	9.0	650	77.0	81.5	96.0
400X300	10.8	9.6	600	80.5	85.0	101
400X350	10.8	10.2	300	58	67	86
450X250	11.4	9.0	700	89.5	97	112
450X300	11.4	9.6	650	93.5	101	117
450X350	11.4	10.2	600	95.6	106	126
450X400	11.4	10.8	300	70.5	83	105
500X300	12.0	9.6	700	109	122	138
500X350	12.0	10.2	650	111	127	145
500X400	12.0	10.8	600	110	130	153
500X450	12.0	11.4	300	83	104	126
600X350	13.2	10.2	750	147	174	193
600X400	13.2	10.8	700	150	178	201
600X450	13.2	11.4	650	151	183	260
600X500	13.2	12	600	149	190	216

DNXdn	T	t	L	Mass(kg)	
				PN10	PN16
700X400	14.4	10.8	800	196	212
700X450	14.4	11.4	750	197	217
700X500	14.4	12	700	200	225
700X600	14.4	13.2	600	195	236
800X450	15.6	11.4	900	263	286
800X500	15.6	12	800	256	284
800X600	15.6	13.2	700	260	298
800X700	15.6	14.4	600	250	285
900X500	16.8	12	1000	338	370
900X600	16.8	13.2	800	318	360
900X700	16.8	14.4	700	321	352
900X800	16.8	15.6	600	308	352
1000X600	18	13.2	1000	422	490
1000X700	18	14.4	800	396	442
1000X800	18	15.6	700	399	448
1000X900	18	16.8	600	373	438
1200X700	20.4	14.4	1345	711	777
1200X800	20.4	15.6	1160	688	758
1200X900	20.4	16.8	975	652	726
1200X1000	20.4	18	790	586	692
1200X1100	20.4	19.2	605	566	655

Flanged Fittings ISO2531/BS EN545/BS EN598

All Flanged Tee with Radial Branch Fig.F312

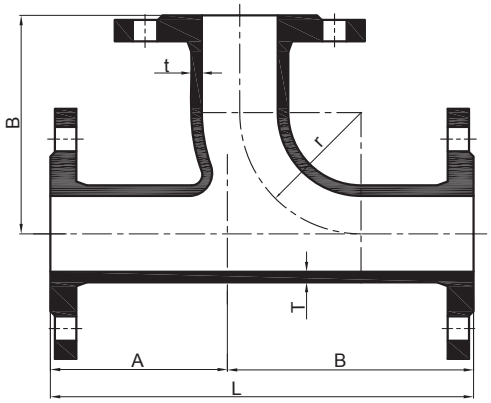

Dimensions(mm)

DNXdn	T	L	A	B	r	Mass(kg) PN16
80X80	8.1	545	165	380	330	23
100X100	8.4	580	180	400	340	29.5
150X150	9.1	670	220	450	385	47.9
200X200	9.8	760	250	500	430	71.6
250X250	10.5	900	350	550	475	104.8
300X300	11.2	1000	400	600	515	144.5
350X350	11.9	1100	450	650	560	203.4
400X400	126	1200	500	700	605	263.1
450X450	13.3	1300	550	750	650	332
500X500	14	1400	600	800	690	421.9
600X600	15.4	1600	700	900	780	623.7

All Flanged Cross Fig.F411

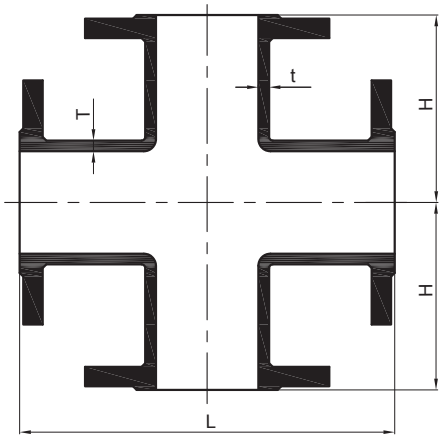

Dimensions(mm)

DNXdn	T	t	L	H	Mass(kg)
80X80	8.1	8.1	330	165	20.5
100X100	8.4	8.4	360	180	24.5
150X150	9.1	9.1	440	220	40.2
200X200	9.8	9.8	520	260	59.3
250X250	10.5	10.5	700	350	97.9
300X300	11.2	11.2	800	400	142.8
350X350	11.9	11.9	850	425	188.2
400X400	12.6	12.6	900	450	235.8
450X450	13.3	13.3	950	475	286
500X500	14	14	1000	500	369.7
600X600	15.4	15.4	1100	550	541.9

Flexible Piping Systems

Features and Benefits

- Optimum solution at narrow spaces.
- Absorb axial-, lateral- and angular movements.
- Reduce water shock.
- Safe, reliable and durable.
- Maintenance free.
- Temperature-, chemical– and corrosion resistant.
- Managing flexibility and pressure is optimized.
- Vacuum- and pressure-proof.
- Can accommodate line misalignment.
- Sound-deadening effects.

Applications

- Compensate for heat-generated expansions.
- Compensate for the settlements of terrain or building structures.
- Compensate for rolling movements and assembly errors.
- Absorb machinery vibrations and reduce the noise they produced.
- Soften the impact of water hammers
- Create disassembly joints
- Interrupt continuous metal lines and protect against stray currents
- Compensate for expansions and vibrations in tubes used for naval purposes.
- Suitable for pressure or suction duty.
- Electrically Conductive.
- Can be fitted between tank and pipework.

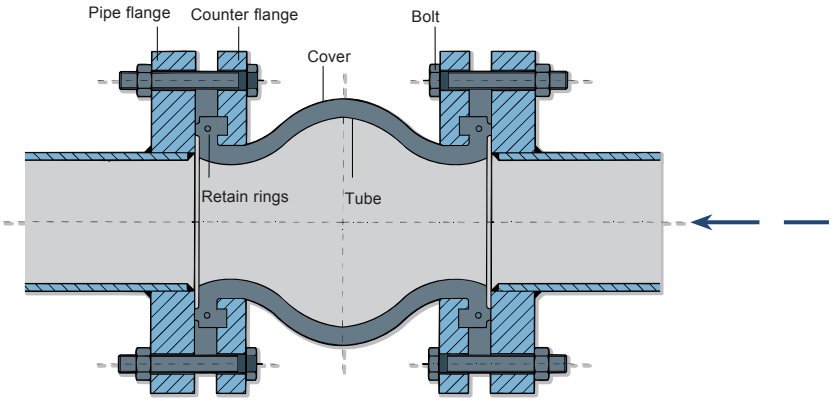

Spherical Moulded Design

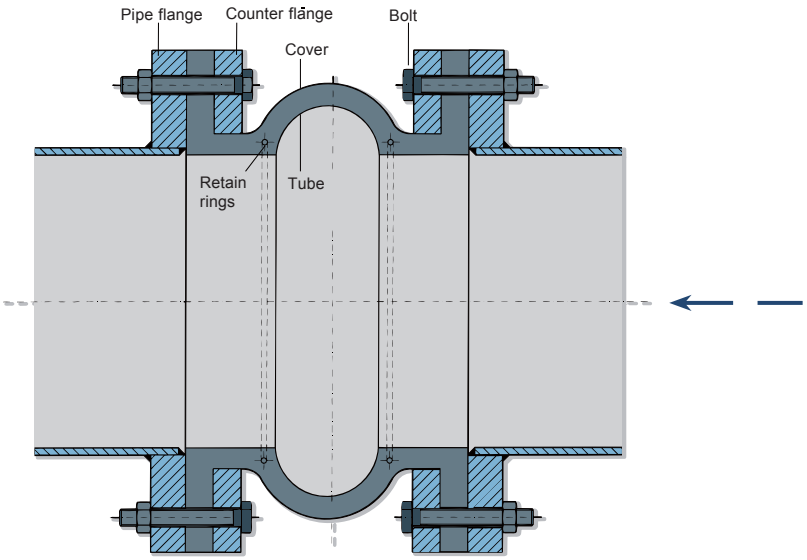

Spool Arch Moulded Design

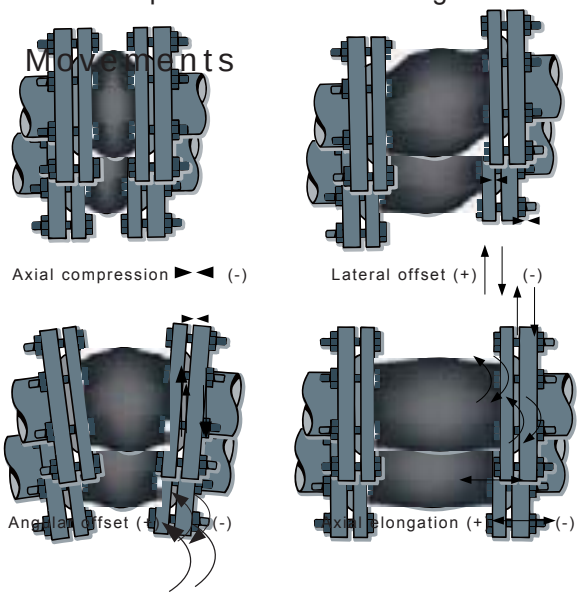

Flexible Piping Systems

1. Tube

The Tube is a single piece of leak-proof lining extending flange-to-flange. It can be furnished in EPDM,NBR,NR,Hypalon,Viton or other compounds as request.All of our rubber compounds are specifically formulated to provide maximum sound and heat insulation as well as abrasion resistance.

2. Fabric Interliner

This is a strong, bias-ply construction, high-strength woven polyester reinforcing fabric between tube and cover. The fabric will not rot or mildew and is thoroughly filled with a special friction compound to give maximum adhesion under pressure, vacuum and stress conditions.

3. Steel Reforcements

Round steel rings embedded in the fabric interliner,giving maximum strength to the expansion joint while under pressure or vacuum service.

4. Cover

This is the exterior surface of the expansion joint, compounded of EPDM compounds to withstand aging, cracking and corrosion.

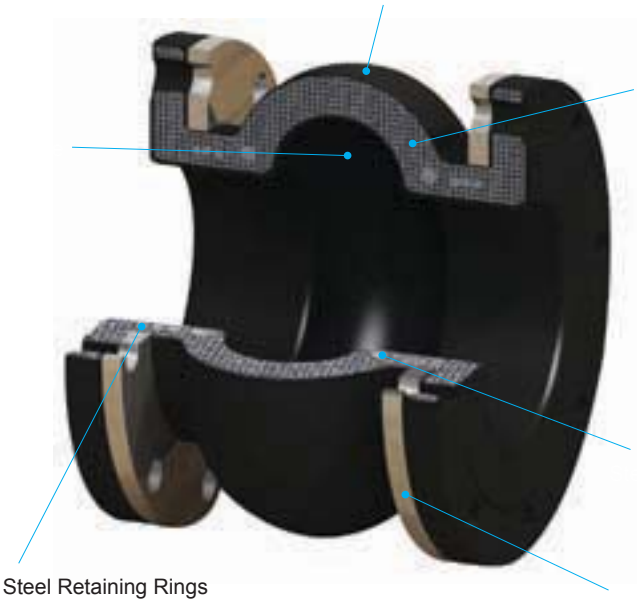

Steel Retaining Rings

5. Flanges

Flanges are full-faced and made an integral part of the joint to insure a tight reliable seal. No gaskets are necessary.

6. Steel Retaining Rings

Steel retaining rings are made of flat-rolled steel, split, beveled and plated, and are required for installation.

Elastomer Selection Guide

Elastomer Tube and Cover	Temperature min/max °C	Suitable Material	Non-Suitable Material
Ethylene Propylene (EPDM)	-10 °C + 105 °C	Steam, warm and cold water, drinking water, compressed air without oil lubricants, vegetable oils, ozone, alcohols, ketones.	Mineral oils, solvents, aromatic hydrocarbons.
Hypalon(CSM)	-20 °C + 120 °C	Strong acids and bases, freons, hydroxides, ozone, alcohols, alkaline and hypochlorite solutions.	Ketones, esters, certain chlorinated oxidizing acids, nitro and aromatic hydrocarbons.
Neoprene(CR)	-10 °c + 105 °C	Warm and cool water, drinking water, moderaters acids, ozone.	Oxidizing acids, esters, ketones, aromatic nitro hydrocarbons.
Buna N(NBR)	-10 °C + 80 °C	Most hydrocarbons, fats, oil greases,hydraulic fluids, solvents.	Ozone, ketones, esters,aldehydes nitro and chlorinated hydrocarbons.
Viton (FKM)	-20 °C + 200 °C	All aliphatic, aromatic and halogenated hydrocarbons. Many acids, animals and vegetable oils.	Ketons, esters and chlorine.

Spherical Rubber Expansion Joint

Single Sphere Rubber Expansion Joint

Fig. SF10

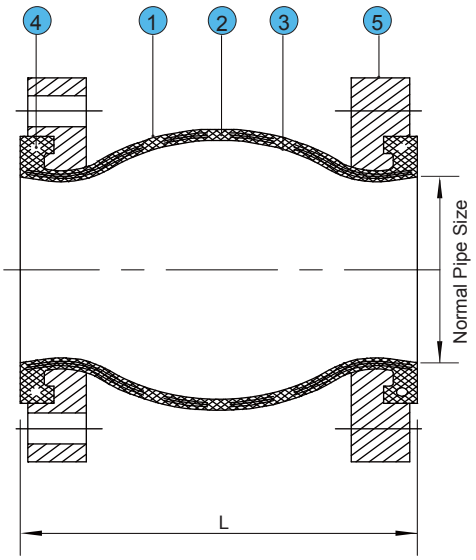

Features

- Minimal axial dimensions
- Limited weight
- Low warping forces
- High-resistance to work
- High-capacity acoustic damping

Specification:

Working Pressure (Bar)	10	16	25
Burst Pressure(Bar)	30	48	55
Vacuum(mmHg)	400	650	750

Material List

Item No.	Parts Name	Parts Material
1	Cover	EPDM
2	Reinforcing Fabric	Nylon
3	Tube	EPDM
4	Retain Rings	Steel
5	Flange	Carbon Steel

*Other rubber material such as Nitrile,Hypalon,NR etc. also available on request.

Dimensions(mm)

Nominal Diameter		Neutral Length	Flange Dimensions				Movements			
DN	NPS	L	O.D.	PCD	b	n-Φd	Axial Ext.	Axial Comp.	Lateral.	Angular.(°)
32	1 1/4	95	140	100	16	4-18	6	9	9	15°
40	1 1/2	95	150	110	16	4-18	6	10	9	15°
50	2	105	165	125	18	4-18	7	10	10	15°
65	2 1/2	115	185	145	18	4-18	7	13	11	15°
80	3	130	200	160	20	8-18	8	15	12	15°
100	4	135	220	180	20	8-18	10	19	13	15°
125	5	170	250	210	22	8-18	12	19	13	15°
150	6	180	285	240	22	8-22	12	20	14	15°
200	8	205	340	295	24	8-22	16	25	22	15°
250	10	240	395	350	26	12-22	16	25	22	15°
300	12	260	445	400	26	12-22	16	25	22	15°
350	14	255	505	460	28	16-22	16	25	22	15°
400	16	255	565	515	32	16-26	16	25	22	15°
450	18	255	615	565	38	20-26	16	25	22	15°
500	20	255	670	620	38	20-26	16	25	22	15°
600	24	260	780	725	38	20-30	16	25	22	15°

(*)Above flange acd, to DIN2576 PN10,other flange drilling such as BS4504 PN10/PN16,JIS10K etc. also available on requests.

◆ ***Note:***

1.All expansion joints are finished with retaining flanges,limit rod units are available on special request.
2.Pressures shows are recommended" operating",test pressure is 1.5 times" operating",burst pressure is 3 times" operating".
3.Vacuum rating is based on neutral installed length without external load.Products shall not be installed" elongated" on vacuum applications.
4.Do not weld near the expansion joints or weld the steel flanges to the piping after the expansion joints are installed. This will either burn or seriously damage the expansion joints.

Spherical Rubber Expansion Joint

Twin Sphere Rubber Expansion Joint

Features

- Minimal axial dimensions
- Limited weight
- Low warping forces
- High-resistance to work
- High-capacity acoustic damping

Specification:

Working Pressure (Bar)	10	16	25
Burst Pressure(Bar)	30	48	55
Vacuum(mmHg)	400	650	750

Material List

Item No.	Parts Name	Parts Material
1	Cover	EPDM
2	Reinforcing Fabric	Nylon
3	Tube	EPDM
4	Retain Rings	Steel
5	Flange	Carbon Steel

*Other rubber material such as Nitrile,Hypalon,NR etc. also available on request.

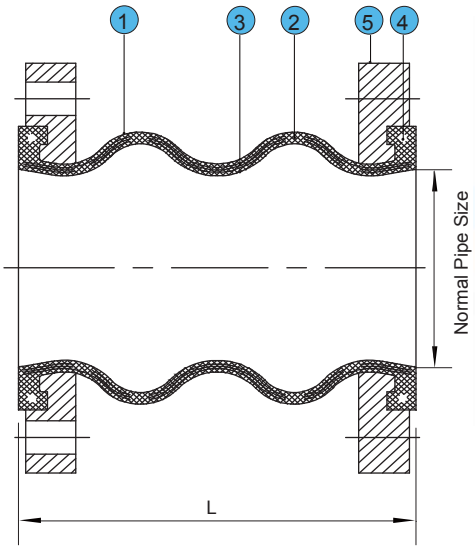

Fig. SF20

Dimensions(mm)

Nominal Diameter		Type A					Type B				
		Neutral Length	Movements				Neutral Length	Movements			
DN	NPS	L	Ext.	Comp.	Lateral.	Angular.(°)	L	Ext.	Comp.	Lateral.	Angular.(°)
40	1 1/2	175	30	50	45	35°	150	10	20	20	30°
50	2	175	30	50	45	35°	150	10	20	20	30°
65	2 1/2	175	30	50	45	35°	150	10	20	20	30°
80	3	175	30	50	45	35°	150	10	20	20	30°
100	4	225	35	50	40	35°	200	15	30	25	30°
125	5	225	35	50	40	35°	200	15	30	25	30°
150	6	225	35	50	40	35°	200	15	30	25	30°
200	8	325	35	50	35	30°	200	20	40	30	30°
250	10	325	35	60	35	30°	200	20	40	30	30°
300	12	325	35	60	35	30°	200	20	40	30	30°
350	14						225	20	40	30	30°
400	16						225	20	40	30	30°
450	18						260	25	45	30	30°
500	20						260	25	45	30	30°
600	24						260	25	45	30	30°

(*)DIN,BS,JIS,ANSI,ASA Flange are all available on request.

Note:

1.All expansion joints are finished with retaining flanges,limit rod units are available on special request.
2.Pressures shows are recommended" operating",test pressure is 1.5 times" operating",burst pressure is 3 times" operating".
3.Vacuum rating is based on neutral installed length without external load.Products shall not be installed" elongated" on vacuum applications.
4.Do not weld near the expansion joints or weld the steel flanges to the piping after the expansion joints are installed. This will either burn or seriously damage the expansion joints.

Spherical Rubber Expansion Joint

Twin Sphere Union Rubber Expansion Joint

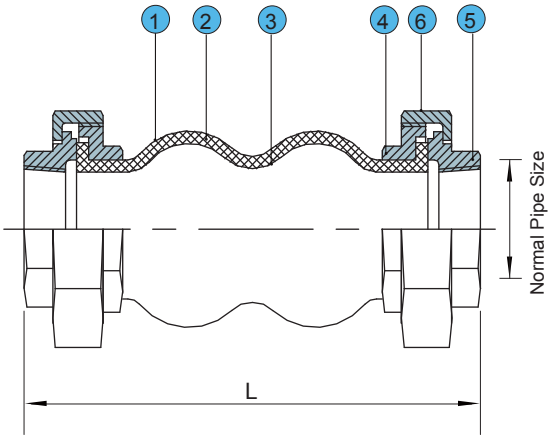

Fig. ST50

Features

- Minimal axial dimensions
- Limited weight
- Low warping forces
- High-resistance to work

Specification:

Working Pressure (Bar)	16
Burst Pressure(Bar)	48
Vacuum(mmHg)	650

Material List

Item No.	Parts Name	Parts Material
1	Cover	EPDM
2	Reinforcing Fabric	Nylon
3	Tube	EPDM
4	Union Flange	Steel
5	Union Nut	Carbon Steel
6	Union Screw	Carbon Steel

*Other rubber material such as Nitrile,Hypalon,NR etc. also available on request.

Dimensions(mm)

Nominal Diameter		Neutral Length	Movements			
DN	NPS	L	Ext.	Comp.	Lateral.	Angular.(°)
20	3/4	200	5-6	22	22	45°
25	1	200	5-6	22	22	45°
32	1 1/4	200	5-6	22	22	45°
40	1 1/2	200	5-6	22	22	45°
50	2	200	5-6	22	22	45°
65	2 1/2	265	8-10	24	24	45°
80	3	285	8-10	24	24	45°

(*) BSP,NPT Union are all available on requests.

◆ ***Note:***

1.All expansion joints are finished with retaining flanges,limit rod units are available on special request.
2.Pressures shows are recommended" operating",test pressure is 1.5 times" operating",burst pressure is 3 times" operating".
3.Vacuum rating is based on neutral installed length without external load.Products shall not be installed" elongated" on vacuum applications.
4.Do not weld near the expansion joints or weld the steel flanges to the piping after the expansion joints are installed. This will either burn or seriously damage the expansion joints.

Spool Arch Rubber Expansion Joint

Features

- Wide Flowing Arch Design
- High Pressure Rating than Normal Expansion Joint
- Integrally flange design,no gasket required
- Galvanized Steel Retaining Rings Standard
- Virtually Eliminate Sediment Buildup.
- Excellent Chemical and Abrasion Resistance
- Absorb noise,vibration and shock.
- ANSI 125/150lb Flange Drilling.

Specification:

Working Pressure	150lb

Material List

Item No.	Parts Name	Parts Material
1	Cover	EPDM
2	Reinforcing Fabric	Nylon
3	Tube	EPDM
4	Retain Rings	Steel
5	Flange	Carbon Steel

*Other rubber material such as Nitrile,Hypalon,NR etc. also available on request.

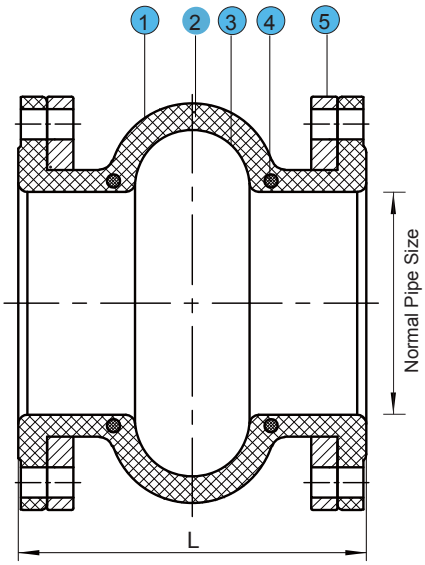

Fig. SF30

Dimensions(mm)

Nominal Diameter		Neutral Length	Flange Dimensions			Movements			
DN	NPS	L	O.D.	PCD	n-Φd	Ext.	Comp.	Lateral.	Angular.(°)
50	2	150	150	120.5	4-20	6	10	12	19°
65	2 1/2	150	180	139.5	4-20	6	10	12	15°
80	3	150	190	152.5	4-20	6	10	12	13°
100	4	150	230	190.5	8-20	6	10	12	10°
125	5	150	255	216	8-22	6	10	12	8°
150	6	150	280	241.5	8-22	6	10	12	6°
200	8	150	345	298.5	8-22	9	17	12	6°
250	10	200	405	362	12-26	9	17	12	5°
300	12	200	485	432	12-26	9	17	12	5°
350	14	200	535	476	12-30	9	17	12	4°
400	16	200	600	540	16-30	9	17	12	4°
450	18	200	635	578	16-33	9	17	12	3°
500	20	200	700	635	20-33	9	17	12	3°
600	24	250	815	749.5	20-36	10	20	12	3°

(*)Above flange acd, to ANSI B16.5,other flange drilling such as DIN,BS,JIS etc. also available on requests.

Note:

1.All expansion joints are finished with retaining flanges,limit rod units are available on special request.
2.Pressures shows are recommended" operating",test pressure is 1.5 times" operating",burst pressure is 3 times" operating".
3.Vacuum rating is based on neutral installed length without external load.Products shall not be installed" elongated" on vacuum applications.
4.Do not weld near the expansion joints or weld the steel flanges to the piping after the expansion joints are installed. This will either burn or seriously damage the expansion joints.

Heavy Duty Rubber Expansion Joint

Fig. SF40

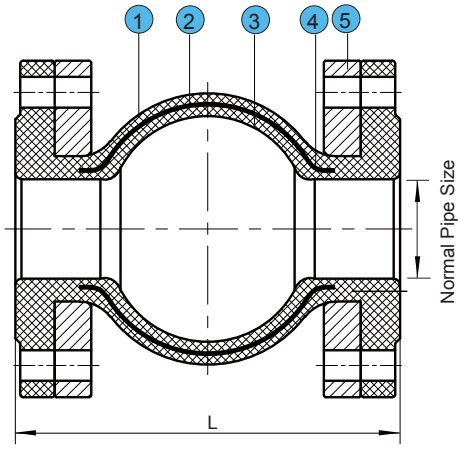

Features

- Wide Flowing Arch Design.
- High Pressure Rating than Normal Expansion Joint.
- Integrally flange design,no gasket required.
- Galvanized Steel Retaining Rings Standard.
- Virtually Eliminate Sediment Buildup.
- Excellent Chemical and Abrasion Resistance.
- Absorb noise,vibration and shock.

Specification:

Working Pressure (Bar)	10	16	25	40
Burst Pressure(Bar)	30	48	55	65
Vacuum(mmHg)	400	650	750	830

Material List

Item No.	Parts Name	Parts Material
1	Cover	EPDM
2	Reinforcing Fabric	Nylon
3	Tube	EPDM
4	Retain Rings	Steel
5	Flange	Carbon Steel

*Other rubber material such as Nitrile,Hypalon,NR etc. also available on request.

Dimensions(mm)

Nominal Diameter		Long Pattern					Short Pattern				
		Neutral Length	Movements				Neutral Length	Movements			
DN	NPS	L	Axial Ext.	Axial Comp	Lateral.	Angular(°)	L	Axial Ext.	Axial Comp	Lateral.	Angular(°)
150	6	180	12	20	14	15°	150	10	18	12	12°
200	8	210	16	25	22	15°	150	10	18	12	12°
250	10	230	16	25	22	15°	200	14	20	18	12°
300	12	245	16	25	22	15°	200	14	20	18	12°
350	14	255	16	25	22	15°	200	14	20	18	12°
400	16	255	16	25	22	15°	200	14	20	18	12°
450	18	255	16	25	22	15°	200	14	20	18	12°
500	20	255	16	25	22	15°	200	14	20	18	12°
600	24	260	16	25	22	15°	200	14	20	18	12°
700	28	320	16	25	22	15°	200	14	20	18	12°
750	30	260	16	25	22	15°	260	16	25	22	15°
800	32	340	16	25	22	15°	260	16	25	22	12°
900	36	370	16	25	22	15°	260	16	25	22	12°
1000	40	400	18	26	24	15°	260	16	25	22	12°
1200	48	420	18	26	24	15°	260	16	25	22	12°
1400	56	450	20	28	26	15°	350	18	24	22	12°
1500	60	500	20	28	26	15°	300	18	24	22	12°
1600	64	500	25	35	30	10°	350	18	24	22	8°
1800	72	550	25	35	30	10°	500	22	30	25	8°
2000	80	550	25	35	30	10°	450	22	30	25	8°
2200	88	580	25	35	30	10°	400	22	30	25	8°
2400	96	610	25	35	30	10°	500	22	30	25	8°
2600	104	650	25	35	30	10°	550	22	30	25	8°
2800	112	680	25	35	30	10°	550	22	30	25	8°
3000	120	680	25	35	30	10°	550	22	30	25	8°

(*)DIN,BS,JIS,ANSI,ASA Flange are all available on request.

Note:

1.All expansion joints are finished with retaining flanges,limit rod units are available on special request.
2.Pressures shows are recommended" operating",test pressure is 1.5 times" operating",burst pressure is 3 times" operating".
3.Vacuum rating is based on neutral installed length without external load.Products shall not be installed" elongated" on vacuum applications.
4.Do not weld near the expansion joints or weld the steel flanges to the piping after the expansion joints are installed. This will either burn or seriously damage the expansion joints.

Reducer Type Rubber Expansion Joint

Features

- Economic and Space Saving
- Minimal axial dimensions
- Limited weight
- Low warping forces
- High-resistance to work
- High-capacity acoustic damping.

Specification:

Size(mm)	DN50-DN300	DN350-DN600
Working Pressure (Bar)	10	6
Burst Pressure(Bar)	20	15
Vacuum(mmHg)	650	400

Material List

Item No.	Parts Name	Parts Material
1	Cover	EPDM
2	Reinforcing Fabric	Nylon
3	Tube	EPDM
4	Retain Rings	Steel
5	Flange	Carbon Steel

*Other rubber material such as Nitrile,Hypalon,NR etc. also available on request.

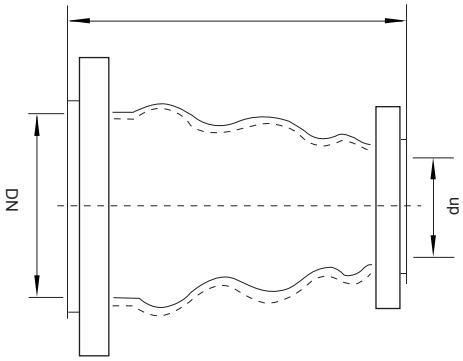

Fig. SR60

Dimensions(mm)

Nominal Diameter DNX dn	Neutral Length (mm)	Movements			
		Ext.	Comp.	Lateral.	Angular.(°)
80 X 40	180	20	30	45	35°
80 X 50	180	20	30	45	35°
80 X 65	180	20	30	45	35°
100 X 50	180	20	30	45	35°
100 X 65	180	20	30	45	35°
100 X 80	180	20	30	45	35°
125 X 65	180	20	30	45	35°
150 X 50	190	20	30	45	35°
150 X 80	190	20	30	45	35°
125 X 80	200	22	30	40	35°
125 X 100	200	22	30	40	35°
150 X 100	200	22	30	40	35°
200 X 100	200	22	30	40	35°
200 X 150	200	22	30	40	35°
200 X 125	220	25	35	40	30°
250 X 200	220	25	35	40	30°
300 X 200	220	25	35	40	30°
300 X 250	220	25	35	40	30°
350 X 200	220	25	35	40	30°
350 X 300	220	25	38	35	30°
400 X 350	220	25	38	35	30°
500 X 400	230	28	38	35	26°
600 X 400	240	28	38	35	26°
600 X 500	240	28	38	35	26°

(*)DIN,BS,JIS,ANSI,ASA Flange are all available on request.

Note:

1.All expansion joints are finished with retaining flanges,limit rod units are available on special request.
2.Pressures shows are recommended" operating",test pressure is 1.5 times" operating",burst pressure is 3 times" operating".
3.Vacuum rating is based on neutral installed length without external load.Products shall not be installed" elongated" on vacuum applications.
4.Do not weld near the expansion joints or weld the steel flanges to the piping after the expansion joints are installed. This will either burn or seriously damage the expansion joints.

Control-Units

Generally, control units are always recommended as an additional safety factor, preventing damage to the joint and the associated equipment.

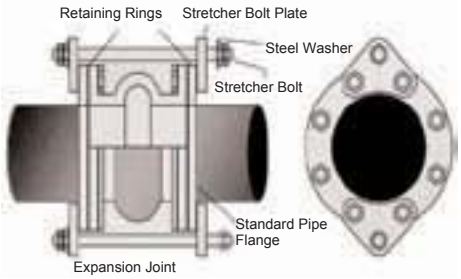

Features:

- Protects Expansion Joints from Over-Expansion and Over-Compression.
- High Tensile Galvanized Steel Rods,Stainless Steel and Other Material is Available on request.
- Galvanized Gusset Plates,Stainless Steel and other Material Available.
- Rubber Grommets Isolate Vibration and are Standard for all the size.
- Spherical Washers Available and Prevent Binding while Minimizing Lateral Forces.
- Double Nuts are used to Lock Limit Points and allow for Field Adjustment.
- Other Standard Drilling Available,Including DIN,BS,EN,UNI,JIS,ANSI etc.
- Universal Tied/Self-Guiding Control Units Available and Prevent Squirming on Longer Expansion Joints.

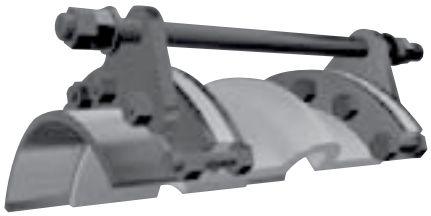

Figure 1: Limit Rod

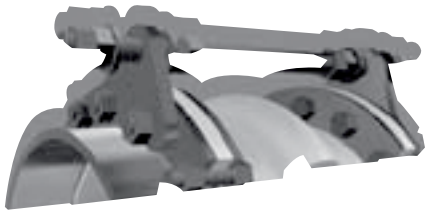

Figure 2: Control Rod

Suggestions for installation and maintenance

1.Clean all foreign matter and remove burrs or sharp edgesfrom flanges.

2. All pipe lines should be properly supported. so that the expansion joints do not carry the pipe load.

3. Remove burrs or sharp edges from flanges.

4.Do not install joints on raised face flanges of more than 1/16”.

5.All pipes are to be lined up accurately before installing expansion joints.

6. Bolts should be on the inside of the joint flange. Metal washer must be placed at the facing of the split retainingring.

7. Bolts should be tightened by alternating around the flange and all tightened equally.

8. Bolt tightness should be checked one week after going on stream and periodically thereafter.

9. If system is not anchored to insure against movement beyond maximum stated limits, a control unit must be used.

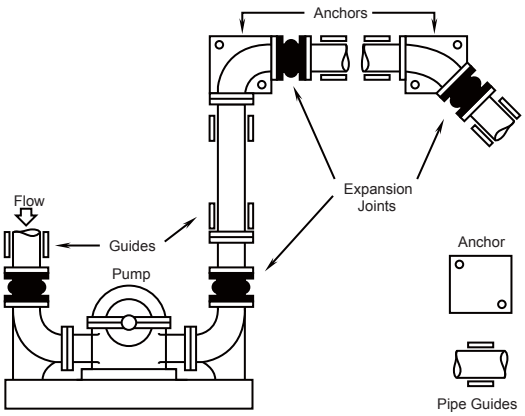

Rubber Duckbill Check Valve

Fondon Global Rubber Duckbill Check Valve is an very reliable and cost effective check valve compare to flap check valves and other conventional check valves.

Rubber Check Valves require minimal maintenance; the simple one-piece design and reinforced rubber construction eliminate the mechanical and metal components that rust and seize in conventional flap-gates and check valves.

Duckbill Check Valve is a passive - reactive device requiring no external mechanisms or power source to operate. The flexible rubber sleeve is normally closed but will react and open with as little as 1 inch of head pressure and always providing maximum flow with minimal pressure drop across the valve. This ease of operation reduces standing water in sewer pipes where mosquitoes and other pests can thrive.

The all flexible construction will pass large objects without blockage yet offers exceptional back flow prevention and can even seal around trapped solids with as little as 1 psi of back pressure.

Rubber Duckbill Check Valve is manufactured with top quality materials including an outer layer specially formulated to repel growth of marine organisms.

Typical Applications

- Storm water outfall
- Flood control systems
- Pumping stations / Wet wells
- Sewer interceptor check valve
- CSO / SSO / Effluent discharge
- Submerged outfall diffuser nozzles
- Coarse bubble air diffusers

Available Elastomers

Standard construction is a natural gum rubber inner tube with a multi-resistant Neoprene outer cover. Neoprene is also commonly used for the inner tube in sewage and treated effluent applications. Other elastomers are available but not often required where this style of valve would be used.

Flanged Duckbill Check Valve

Fondon Global Flanged Duckbill Check Valve is manufactured with an integral reinforced rubber flange complete with metal backing rings,which can be bolted directly to a headwall, tank wall or pipe flange.

Fig. DV10

Features

- Quiet operation
- Non slamming
- Minimal maintenance
- Seals around trapped objects
- Low head loss
- Reliable performance

Applications

- Sewer Interceptors
- Outfall Lines
- Wet/Dry Wells
- Storm water discharge
- Submerged outfall diffuser nozzle

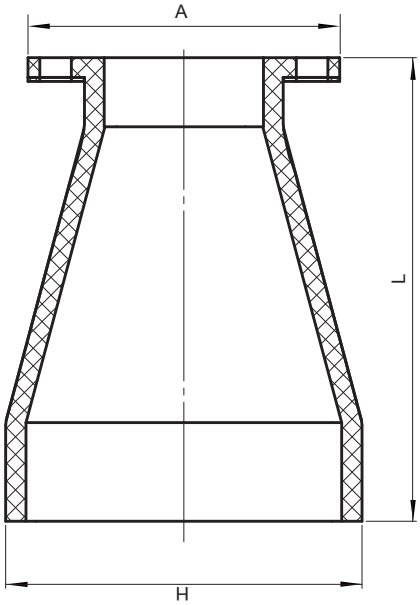

Dimensions(mm)

Pipe Size ID		Length L	Height H	Flange Outside Diameter A
DN	NPS			
50	2	150	100	150
80	2 1/2	220	140	200
100	3	250	200	225
150	6	340	265	275
200	8	420	325	338
250	10	520	425	400
300	12	620	525	485
350	14	700	625	525
400	16	800	725	588
450	18	900	825	625
500	20	980	925	688
600	24	1120	1025	800
700	28	1180	1125	969
800	32	1350	1400	1080
900	36	1500	1525	1150
1000	40	1600	1725	1325
1200	48	1840	1950	1485

Insertable Duckbill Check Valve

Fondon Global Insertable Duckbill Check Valves are designed to fit right inside the pipe. No valve body is required. This feature not only saves money but also permits installation in otherwise difficult situations such as tank outlets, floor drains, sewer interceptors, overflow systems, retention basins and manhole outlets.

DV20-E fits directly inside the pipe and is secured in place by an expandable clamp ring made of stainless steel. DV20-F also fits directly inside the pipe and is bolted in place between the pipe flanges.

Features

- Quiet operation
- Non slamming
- Minimal maintenance
- Seals around trapped objects
- Low head loss
- Reliable performance

Applications

- Sewer Interceptors
- Outfall Lines
- Wet/Dry Wells
- Storm water discharge
- Submerged outfall diffuser nozzle

Dimensions(mm)

Pipe Size ID		Length L	Height H	Flange Outside Diameter A
DN	NPS			
50	2	125	47	150
80	3	175	72	200
100	4	225	97	225
150	6	320	47	275
200	8	375	197	338
250	10	475	247	400
300	12	560	297	485
350	14	625	344	525
400	16	700	394	588
450	18	780	444	625
500	20	880	494	688
600	24	1000	494	800
700	28	1100	694	969
800	32	1260	794	1080
900	36	1400	894	1150
1000	40	1520	988	1250
1200	48	1725	1188	1485

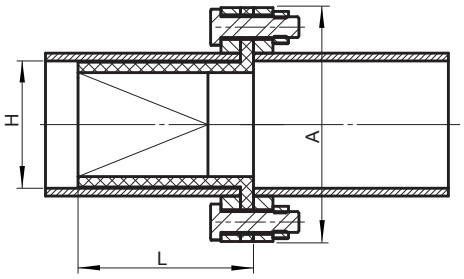

Fig.DV20-F

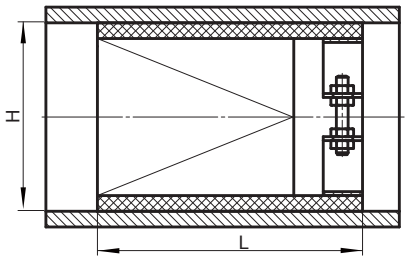

Fig.DV20-E

Slip-On Duckbill Check Valve

Fondon Global Slip-On Duckbill Check Valve is manufactured with an integral reinforced flexible sleeve end complete with heavy duty clamps,which can be easily attached directly over the pipe end.

Fig.DV30

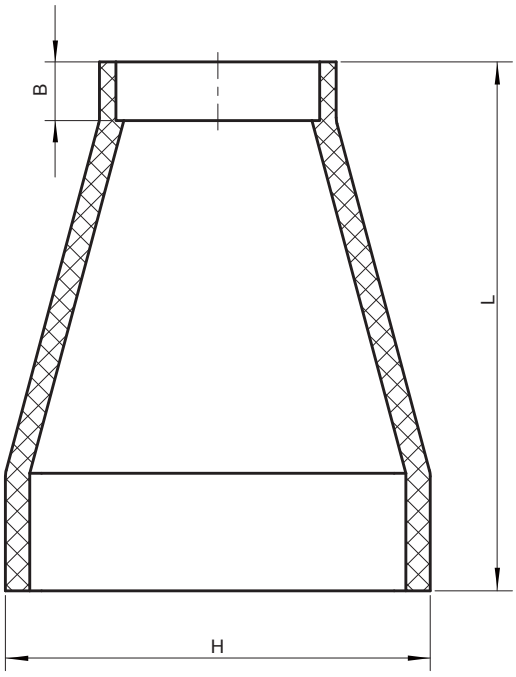

Features

- Quiet operation
- Non slamming
- Minimal maintenance
- Seals around trapped objects
- Low head loss
- Reliable performance

Applications

- Sewer Interceptors
- Outfall Lines
- Wet/Dry Wells
- Storm water discharge
- Submerged outfall diffuser nozzle

Dimensions(mm)

Pipe Size ID		Length L	Height H	Embed Depth B
DN	NPS			
50	2	158	100	25
80	3	232	140	40
100	4	270	200	40
150	6	360	265	50
200	8	450	325	50
250	10	560	425	75
300	12	650	525	115
350	14	750	625	115
400	16	850	725	135
450	18	950	825	150
500	20	1060	925	200
600	24	1200	1025	200
700	28	1260	1125	200
800	32	1450	1400	250
900	36	1620	1525	250
1000	40	1720	1725	250
1200	48	2010	1950	300
1400	56	2280	2320	320
1600	64	2600	2650	350
1800	72	2920	2960	400
2000	80	3150	3300	450
2200	88	3450	3580	500
2400	96	3760	3925	550
2600	104	3900	4250	600
2800	112	4200	4580	650
3000	120	4500	4990	700

Metallic Expansion Joint

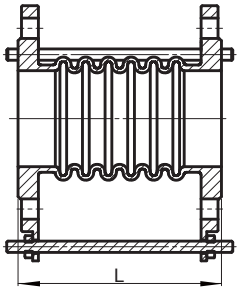

Fig.ME10

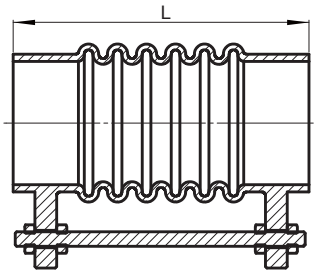

Fig.ME20

Dimensions(mm)

Nominal diameter DN	Ripple Qty.	Working Pressure(bar)						Effective area (cm^2)	Max. Outside Diameter (mm)	Supplied Length (mm)			
		10	16	25	10	16	25			Flanged End		Welded End	
		Axial Compensation(mm)			Force for Compress(N/mm)								
32	8	20	18	15	26	63	98	16	225	160	250	264	280
40	8	20	18	15	44	89	106	23	244	164	259	269	289
50	8	20	18	15	70	70	138	37	259	172	276	282	306
65	8	26	22	19	44	55	68	55	270	215	294	300	322
80	8	34	28	25	33	41	54	81	284	240	338	344	366
100	6	40	35	29	75	93	117	121	304	235	317	323	345
125	5	38	34	29	59	74	92	180	334	282	314	316	342
150	5	40	34	29	62	78	97	257	364	282	339	338	367
200	4	42	38	34	68	78	111	479	442	280	348	348	372
250	4	59	52	47	42	45	55	769	507	315	379	415	379
300	4	59	52	47	59	65	71	1105	562	366	427	466	467

Dimensions(mm)

Nominal diameter DN	Ripple Qty.	Working Pressure(bar)						Effective area (cm^2)	Max. Outside Diameter (mm)	Supplied Length (mm)			
		10	16	25	10	16	25			Flanged End		Welded End	
		Axial Compensation(mm)			Force for Compress(N/mm)								
32	16	41	36	31	14	32	47	16	225	224	291	316	321
40	16	41	36	31	22	45	55	23	244	230	304	319	334
50	16	41	36	31	35	35	70	37	259	240	342	347	372
65	12	38	34	29	32	40	50	55	270	260	334	340	362
80	10	49	43	38	21	26	33	81	284	270	368	374	390
100	10	64	57	49	40	50	63	121	304	305	381	387	409
125	9	66	58	50	36	45	56	180	334	382	386	388	414
150	8	64	54	46	51	59	65	257	364	356	399	402	427
200	6	59	53	48	52	58	78	479	442	340	402	402	426
250	6	87	79	71	35	39	47	769	507	393	459	493	399
300	6	87	79	71	37	41	45	1105	562	464	525	564	565

PRODUCTOS Y SOLUCIONES
EN REDES DE FLUIDOS

PRODUCTS AND SOLUTIONS
IN FLOW SYSTEMS

Fondon global

Fondon redes y fluidos

FLOW CONTROL APPLICATIONS
FCA
APLICACIONES PARA CONTROL DE FLUIDOS, S.L.

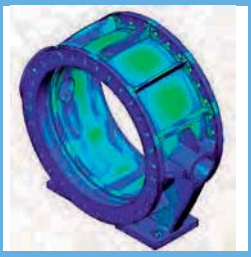

Diseño
Design

Fabricación
Manufacturing

Representación
Representation

Comercialización
Marketing

Fondon Redes y Fluidos, S.L.

Oficina Principal
email: fondon@fondon.org | Skype: FRF-comercial_esp
tel.: +34 985310351 | fax: +34 985312309
Avenida Veriña, 5 | 33211 Gijón | Asturias (España)

Oficina de representación en Cuba
email: fondon@fondon.co.cu
tel.: (537) 2042384 | 2042627
C/ 44 nº309 e /3ra y 5ta | Miramar | La Habana | Cuba

Oficina secundaria de representación en Cuba
email: fondonmoa@fondon.co.cu
tel.: (5324) 606909 | 606908
Almacenes Universales C/1ra, s/n, Reparto
Armando Mestre | Moa | Holguín | Cuba

www.fondonglobal.com